YAZAKI PART NO. AND CH. CODE	NO.	PART NAME	PART NO.	MATERIAL
7157-7812 △2(7B57-7812)	1	REAR STOPPER	7157-7810-80 △2(7B57-7810-80)	PBT (BROWN)
	2	SEAL RUBBER	————	SELF-LUBRICATING SILICONE RUBBER

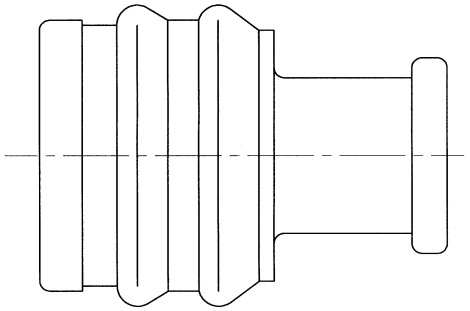

△2 注記

1. かん合部品番号は：7222-1424-40, 7123-1424-40 ETC.
2. 適用電線サイズ ： AVS 0.3, AVS 0.5, CAVS 0.5
   AEX (AVX) 0.5
3. ( ) 内品番は、エアバッグ (A/B) 回路及び特別回路に使用時に適用する。

△2 NOTES

1. MATING PART NO. : 7222-1424-40, 7123-1424-40 ETC.
2. APPLICABLE WIRE SIZE : AVS 0.3, AVS 0.5, CAVS 0.5
   AEX (AVX) 0.5
3. ( ) PART NO IS USED FOR PARTS ASSOCIATED WITH A/B CIRCUITS OR OTHER SPECIFIED CIRCUITS.

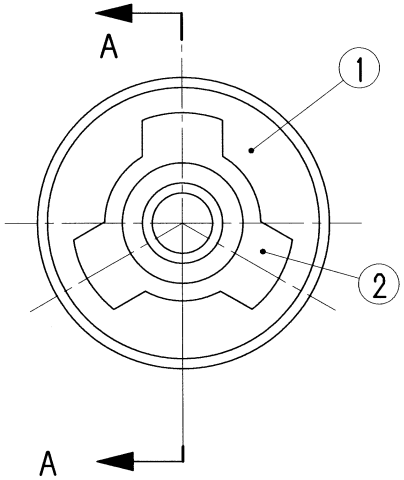

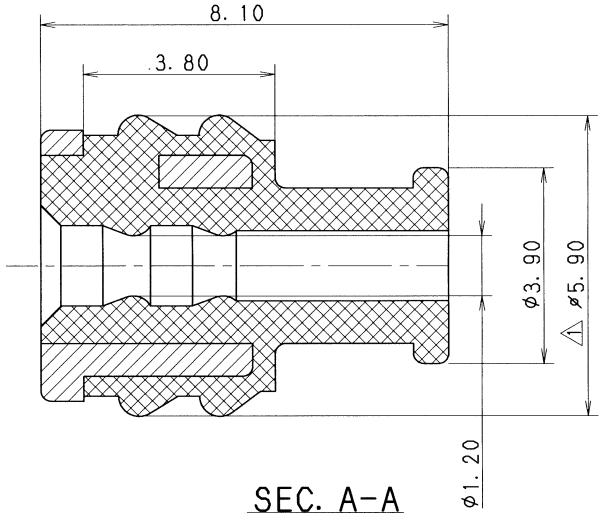

SEC. A-A

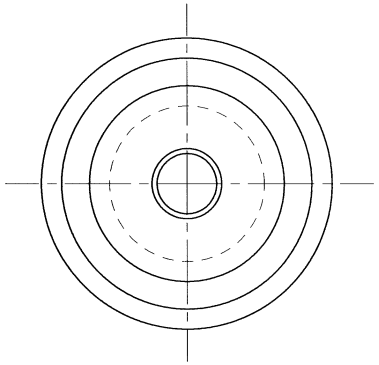

ISSUE MARK

LET	DATE	REVISION RECORD	NO.	CHKD
△2	08.11.24	ADDED A/B PART NO., ETC.	C08-Z837	T.W
△1	88.05.10	CHANGED FORM	8MC-0536	S.Y
	87.04.11	NEW	7MC-0179	S.K

GENERAL TOLERANCE

	10MAX	50MAX	100MAX	250MAX	2500VR	ANGLE	ECCENT
A	±0.15	±0.2	±0.3	±0.5	±0.75	±30′	0.1
B	±0.2	±0.3	±0.55	±0.95	±1.4	±30′	0.1
©	±0.3	±0.5	±0.8	±1.4	±2	±30′	0.15

SPECIFIED

MASS g

CUSTOMER

CUSTOMER PART NO. | CUSTOMER DWG NO.

OFFICE | TRIAL PART NO.

VENDOR

VENDOR NO.

DWG TYPE	DWG SOURCE	DWG DATE	UNIT	SCL	ANGLE
R	NEW	87.04.11	mm	10:1	3

APPROVED	CHECKED	CHECKED	DESIGN	DRAWN
杉山(勇)		渡辺	山田	C. AGCAOILI
'08.12.04		'08.12.04	87.04.11	08.11.24

MATL. SPEC. △2 SEE TABLE

TREAT. & FIN.

NAME SWP-TYPE CONNECTOR SEAL RUBBER 1P ASSY (I)

PART NO. CH. CODE 7157-7812 (7B57-7812)△2

DWG NO. 7157-7812:R

SET DWG NO.

YAZAKI CORPORATION