NO.	YAZAKI PART NO.	COLOR
1	7157-6023-90	LIGHT BLUE
⚠ 2	7157-6023-30	BLACK

注 記

⚠ 1) 適用ハウジング品番：7123-1629-90 ETC.

NOTE

⚠ 1) APPLICABLE HOUSING NO. :7123-1629-90 ETC.

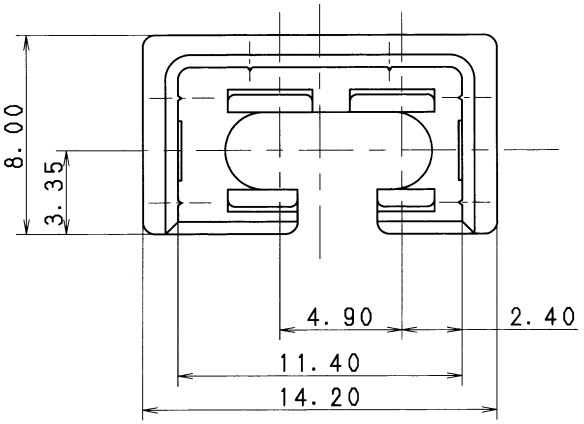

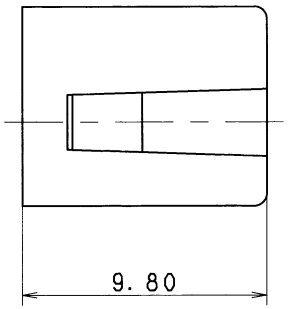

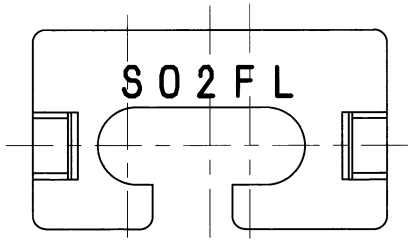

ISSUE MARK

LET	DATE	REVISION RECORD	NO.	CHKD
⚠1	96.09.30	ADDED PART NO.	C96-M822	H.K
	88.11.01	NEW	8MC-3164	T.M

GENERAL TOLERANCE

	10MAX	50MAX	100MAX	250MAX	2500VR	ANGLE	ECCENT
A	±0.15	±0.2	±0.3	±0.5	±0.75	±30′	0.1
B	±0.2	±0.3	±0.55	±0.95	±1.4	±30′	0.1
Ⓒ	±0.3	±0.5	±0.8	±1.4	±2	±30′	0.15

SPECIFIED

MASS g

CUSTOMER

CUSTOMER PART NO. | CUSTOMER DWG NO.

OFFICE | TRIAL PART NO.

VENDOR

VENDOR NO.

DWG TYPE	DWG SOURCE	DWG DATE	UNIT	SCL	ANGLE
R	NEW	88.10.15	mm	5/1	3

APPROVED	CHECKED	CHECKED	DESIGN	DRAWN
神田		濱辺	SAKAI	MOTOHASHI 川林
96.10.4		96.10.3	82.08.02	96.10.3

MATL. SPEC. NYLON 6

TREAT. & FIN.

NAME REAR HOLDER FOR S02FL

PART NO. CH. CODE ⚠7157-6023-90 ETC.

DWG NO. 7157-6023-90:R

YAZAKI CORPORATION