YAZAKI PART NO.	COLOR
7123-8307	NATURAL
7123-8307-30	BLACK
7123-8307-60	GREEN
△2 7123-8307-90	BLUE

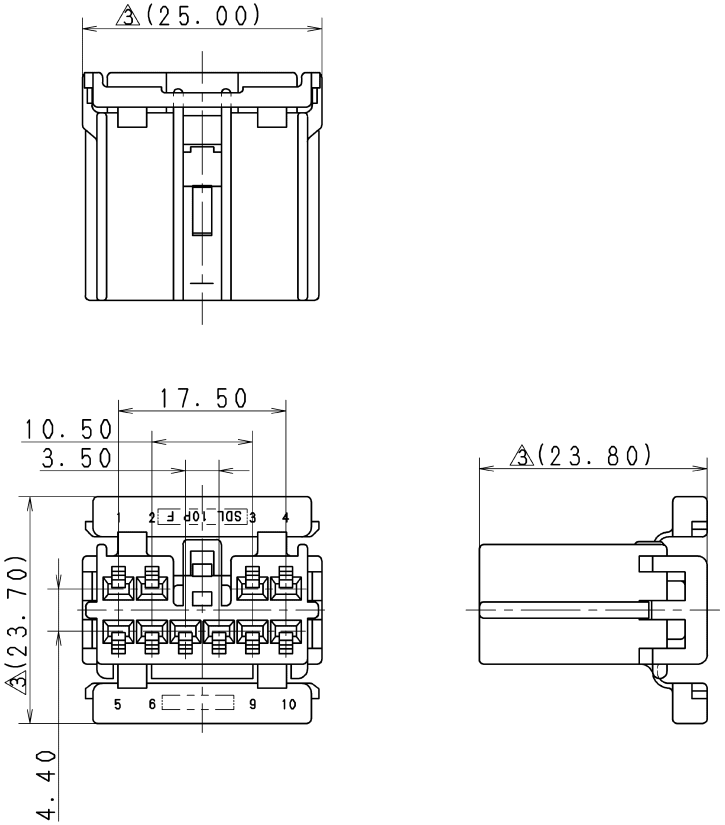

注 記

1. かん合相手品番 ： 7122-8307 ETC.
2. 適用端子品番 ： 7116-1473, 7116-1473-08.
   7116-1474, 7116-1474-08.

NOTES

1. MATING PART NO. :7122-8307 ETC.
2. APPLICABLE TERMINAL PART NO. :7116-1473, 7116-1473-08.
   7116-1474, 7116-1474-08.

ISSUE MARK

LET	DATE	REVISION RECORD	NO.	CHKD
△3	11.04.25	CHANGED GENERAL TOLERANCE ETC.	C11-Z277	T.W
△2	91.01.14	ADDED PART NO. & RENEW	C91-6038	S.I
△1	87.12.14	CHANGED FORM & RENEW	7MC-0860	O.S
	87.10.02	NEW	7MC-0610	H.S

△3 GENERAL TOLERANCE

	10MAX	50MAX	100MAX	250MAX	2500VR	ANGLE	ECCENT
A	±0.15	±0.2	±0.3	±0.5	±0.75	±30′	0.1
B	±0.2	±0.3	±0.55	±0.95	±1.4	±30′	0.1
Ⓒ	±0.3	±0.5	±0.8	±1.4	±2	±30′	0.15

SPECIFIED

MASS

CUSTOMER

CUSTOMER PART NO.

CUSTOMER DWG NO.

OFFICE

TRIAL PART NO.

VENDOR

VENDOR NO.

DWG TYPE	DWG SOURCE	DWG DATE	UNIT	SCL	ANGLE
R	NEW	87.10.02	mm	2:1	3

APPROVED	CHECKED	CHECKED	DESIGN	DRAWN
H. KONDO	T. KOBAYASHI	T. WATANABE	H. SAITOH	M. CABO
11.04.25	11.04.25	11.04.25	87.10.02	11.04.25

MATL. SPEC. P.B.T

TREAT. & FIN.

NAME △3 SDL TYPE HOUSING

10P FEMALE

PART NO. CH. CODE 7123-8307 ETC.

DWG NO. 7123-8307:R

SET DWG NO.

YAZAKI CORPORATION