PARTS NO.	COLOR	MATERIAL
7123-2810	NATURAL	66 NYLON
7123-2810-10	DARK GRAY	
7123-2810-30	BLACK	
7123-2810-40	LIGHT GRAY	
7123-2810-60	GREEN	
7123-2810-70	YELLOW	
7123-2810-80	BROWN	
7123-2810-90	BLUE	

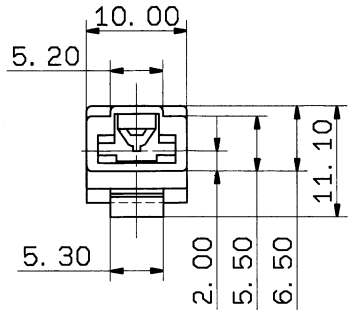

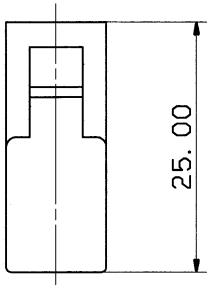

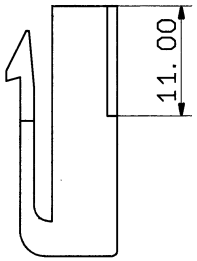

注 記

1. 適用端子品番:7116-2640 ETC.
2. 嵌合相手品番:7122-2810 ETC.

NOTE

1. APPLICABLE TERMINAL NO. :7116-2640 ETC.
2. MATING PART NO. :7122-2810 ETC.

ISSUE MARK

LET	DATE	REVISION RECORD	NO.	CHKD
2	94. 05. 30	RENEW	C94-L123	M. T

GENERAL TOLERANCE

	10MAX	50MAX	100MAX	250MAX	2500VR	ANGLE	ECCENT
A	±0. 15	±0. 2	±0. 3	±0. 5	±0. 75	±30'	0. 1
B	±0. 2	±0. 3	±0. 55	±0. 95	±1. 4	±30'	0. 1
©	±0. 3	±0. 5	±0. 8	±1. 4	±2	±30'	0. 15

SPECIFIED

MASS g

CUSTOMER

CUSTOMER PART NO. | CUSTOMER DWG NO.

OFFICE | TRIAL PART NO.

VENDOR

VENDOR NO.

DWG TYPE	DWG SOURCE	DWG DATE	UNIT	SCL	ANGLE
R	RENEW	94. 05. 30	mm	2/1	3

APPROVED	CHECKED	CHECKED	DESIGN	DRAWN
酒井	増田	竹下	TAKENOUCHI	KUZUNO
'94. 06. 07	94. 6. 3	94. 5. 31	79. 04. 20	94. 05. 30

MATL. SPEC. SEE TABLE | TREAT. & FIN.

NAME 1 POLE HOUSING FEMALE (WITH HOUSING LANCE AND LOCK)

PART NO. / CH. CODE 7123-2810 ETC.

DWG NO. 7123-2810:R

YAZAKI CORPORATION