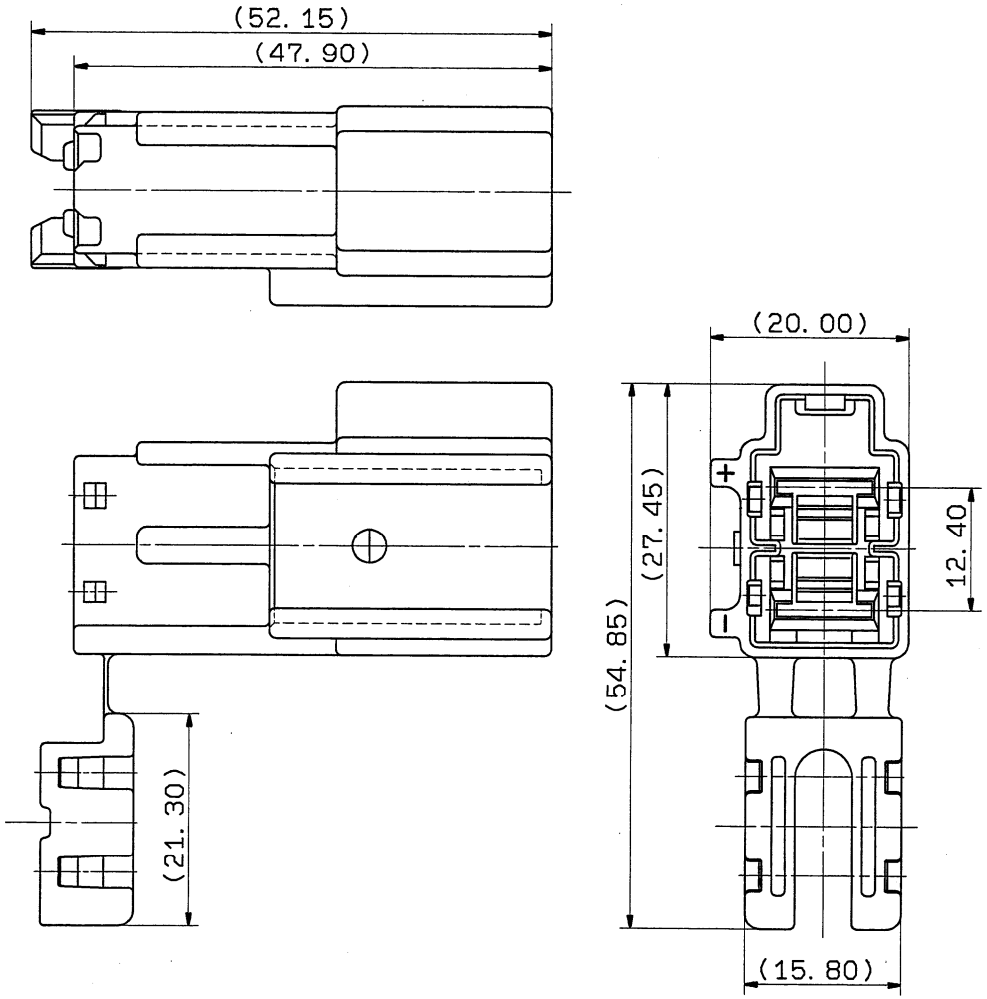

注 記

1. 嵌合相手品番:7123-4320-30
2. 適用端子品番:7114-3250 ETC.

NOTE

1. MATING PART NO. :7123-4320-30
2. APPLICABLE TERMINAL NO. :7114-3250 ETC.

ISSUE MARK

LET	DATE	REVISION RECORD	NO.	CHKD
	95.02.28	NEW	C95-L364	M.K

GENERAL TOLERANCE

	10MAX	50MAX	100MAX	250MAX	2500VR	ANGLE	ECCENT
A	±0.15	±0.2	±0.3	±0.5	±0.75	±30'	0.1
B	±0.2	±0.3	±0.55	±0.95	±1.4	±30'	0.1
Ⓒ	±0.3	±0.5	±0.8	±1.4	±2	±30'	0.15

SPECIFIED

MASS g

CUSTOMER

CUSTOMER PART NO. | CUSTOMER DWG NO.

OFFICE | TRIAL PART NO.

VENDOR

VENDOR NO.

DWG TYPE	DWG SOURCE	DWG DATE	UNIT	SCL	ANGLE
R	NEW	95.02.24	mm	2/1	3

APPROVED	CHECKED	CHECKED	DESIGN	DRAWN
八木	辻	程	KASHIYAMA	S. UEBO 甲斐
95.3.3	95.02.28	94.06.01		95.02.28

MATL. SPEC. PBT (BLACK) | TREAT. & FIN.

NAME NEW L TYPE 2P

HOUSING MALE (L02MB-MC)

PART NO. CH. CODE 7122-4320-30

DWG NO. 7122-4320-30:R

YAZAKI CORPORATION