PART NO. AND CH. CODE	COLOR
7122-3016	NATURAL
△2 7122-3016-10	DARK GRAY
7122-3016-30	BLACK
△3 7122-3016-40	LIGHT GRAY
7122-3016-60	GREEN
△1 7122-3016-90	BLUE

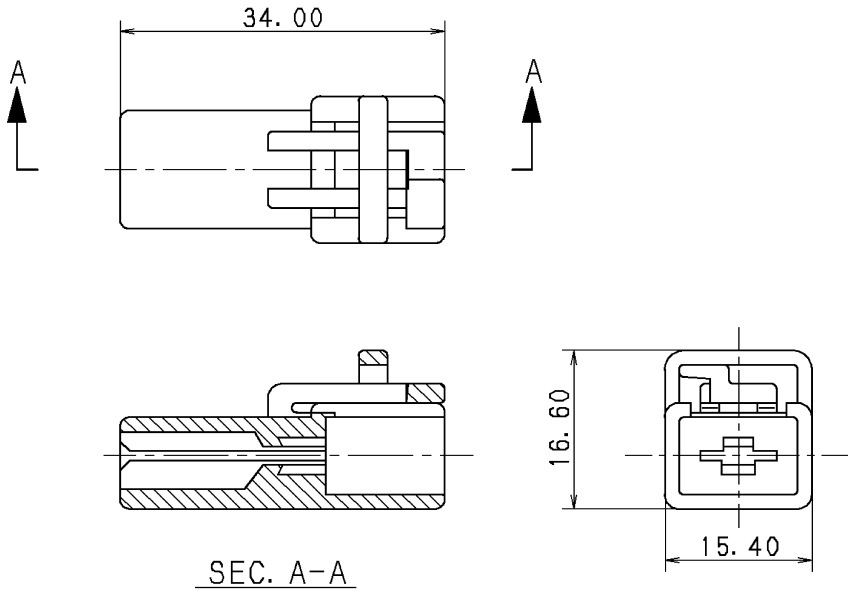

注 記

△4 1. かん合相手品番：7123-3010 ETC.

△4 2. 適用ターミナル品番：7114-3030

NOTES

△4 1. MATING PART NO. :7123-3010 ETC.

△4 2. APPLICABLE TERMINAL NO. :7114-3030

LET	DATE	REVISION RECORD	NO.	CHKD
△5	11.01.14	CHANGED PART NAME	C11-ZA30	C.S
△4	00.07.07	CORRECT ALL ERROR & CAD DRAWN	C00-L692	H.S
△3	88.12.19	ADDED COLOR NO.	8MC-1760	松浦き
△2	88.04.21	ADDED COLOR NO.	8MC-0450	山本ゐ
△1	81.09.30	ADDED PART NO.	C81-2819	山田
	81.08.03	NEW	C81-2644	竹之内

GENERAL TOLERANCE

	10MAX	50MAX	100MAX	250MAX	2500VR	ANGLE	ECCENT
A	±0.15	±0.2	±0.3	±0.5	±0.75	±30′	0.1
B	±0.2	±0.3	±0.55	±0.95	±1.4	±30′	0.1
Ⓒ	±0.3	±0.5	±0.8	±1.4	±2	±30′	0.15

SPECIFIED

MASS

CUSTOMER

CUSTOMER PART NO.

CUSTOMER DWG NO.

OFFICE

TRIAL PART NO.

VENDOR

VENDOR NO.

DWG TYPE	DWG SOURCE	DWG DATE	UNIT	SCL	ANGLE
R	NEW	81.08.03	mm	2:1	3

APPROVED	CHECKED	CHECKED	DESIGN	DRAWN
S. MIZUSE	———	R. DE GUZMAN	兼子	C. SANJOAQUIN
11.01.14	———	11.01.14	79.01.11	11.01.14

MATL. SPEC. PA6

TREAT. & FIN.

NAME △5 305 1P HOUSING MALE

PART NO. CH. CODE 7122-3016 ETC.

DWG NO. 7122-3016:R

SET DWG NO.

YAZAKI CORPORATION

ISSUE MARK