PART NO. AND CH. CODE	A_1	A_2	B	②W_1±0.4	②W_2±0.4	②H_1	②H_2	②X	②Y	②Z	WIRE SIZE	MATERIAL
7116-6040	4.00	1.70	7.20	3.60	4.70	(3.34)	(4.20)	0	0	0	AVS 0.5~AVS 1.25 EQUIVALENT	④BRASS (t=0.40) TIN PLATING
7116-6041, Ⓐ	4.00	1.70	7.20	4.90	6.40	(4.62)	(5.66)	0.50	1.90	2.90	AVS 2~AVS 3 EQUIVALENT	③COPPER ALLOY (t=0.40) TIN PLATING
7116-6042, Ⓐ	5.50	3.00	11.00	6.80	8.60	(6.48)	(7.53)	0.50	3.20	5.20	AVS 5~AV 8 EQUIVALENT	①COPPER ALLOY (t=0.40) TIN PLATING

注 記

② 1. 嵌合相手品番：7114-6040 ETC.

NOTE

② 1. MATING PART NO. :7114-6040 ETC.

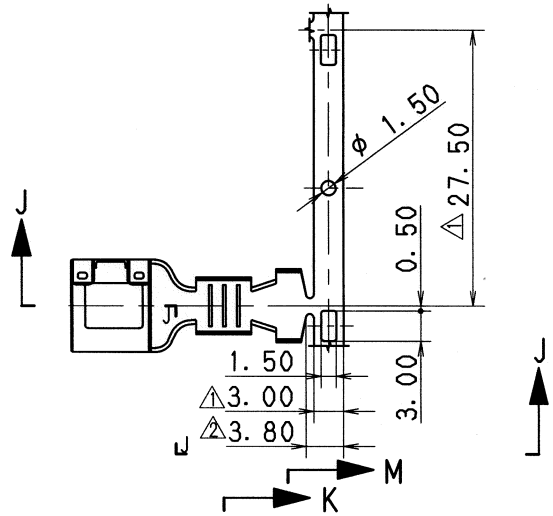

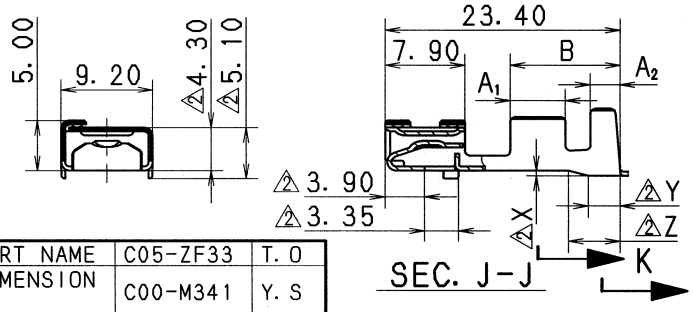

SEC. J-J

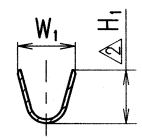

SEC. K-K

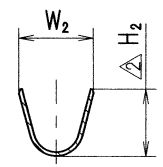

SEC. M-M

LET	DATE	REVISION RECORD	NO.	CHKD
④	05/11/08	CHANGED PART NAME	C05-ZF33	T. O
③	00/11/08	CHANGED DIMENSION & MATERIAL	C00-M341	Y. S
②	98/08/04	CHANGED NOTES & DIMENSION	C97-N464	H. K
①	97/01/16	CHANGED MATERIAL, Ⓐ	C97-6089	M. T
	90/09/13	NEW	C90-L977	A. H

GENERAL TOLERANCE

	10MAX	50MAX	100MAX	250MAX	2500VR	ANGLE	ECCENT
A	±0.15	±0.2	±0.3	±0.5	±0.75	±30′	0.1
B	±0.2	±0.3	±0.55	±0.95	±1.4	±30′	0.1
Ⓒ	±0.3	±0.5	±0.8	±1.4	±2	±30′	0.15

SPECIFIED

MASS g

ISSUE MARK

CUSTOMER

CUSTOMER PART NO.

CUSTOMER DWG NO.

OFFICE

TRIAL PART NO.

VENDOR

VENDOR NO.

DWG TYPE	DWG SOURCE	DWG DATE	UNIT	SCL	ANGLE
R	NEW	90/09/13	mm	① 2:1	3

APPROVED	CHECKED	CHECKED	DESIGN	DRAWN
上野	田口	室田 長	A. MAEDA	F. QUINQUILERIA ROMEL GALIZA
'05.11.16	'05.11.15	'05.11.15 '05.11.15	87/08/08	05/11/08

MATL. SPEC. SEE TABLE

TREAT. & FIN.

NAME ④ 8.0 TERMINAL FEMALE

PART NO. CH. CODE 7116-6040 ETC.

DWG NO. 7116-6040:R

SET DWG NO.

YAZAKI CORPORATION