| YAZAKI PART NO. AND CH. CODE | C | D | E | $W_1$ | $R_1$ | $W_2$ | $R_2$ | △4 $H_1$ | △4 $H_2$ | WIRE SIZE | MATERIAL |
|---|---|---|---|---|---|---|---|---|---|---|---|
| 7116-2951, A | 4.00 | 1.70 | 7.50 | 3.60 | 0.70 | 5.30 | 1.60 | (3.90) | (4.70) | AVS 0.85～2.00 EQUIVALENT | △4 BRASS, t=0.40 |
| 7116-2951-02, A | // | // | // | // | // | // | // | // | // | // | △4 BRASS, t=0.40 TIN PLATE |
| 7116-2952, A | 3.00 | 1.70 | 6.50 | 2.40 | 0.40 | 3.90 | 1.10 | (2.80) | (3.43) | AVS 0.20～0.50 EQUIVALENT | △4 BRASS, t=0.40 |
| 7116-2952-02, A | // | // | // | // | // | // | // | // | // | // | △4 BRASS, t=0.40 TIN PLATE |

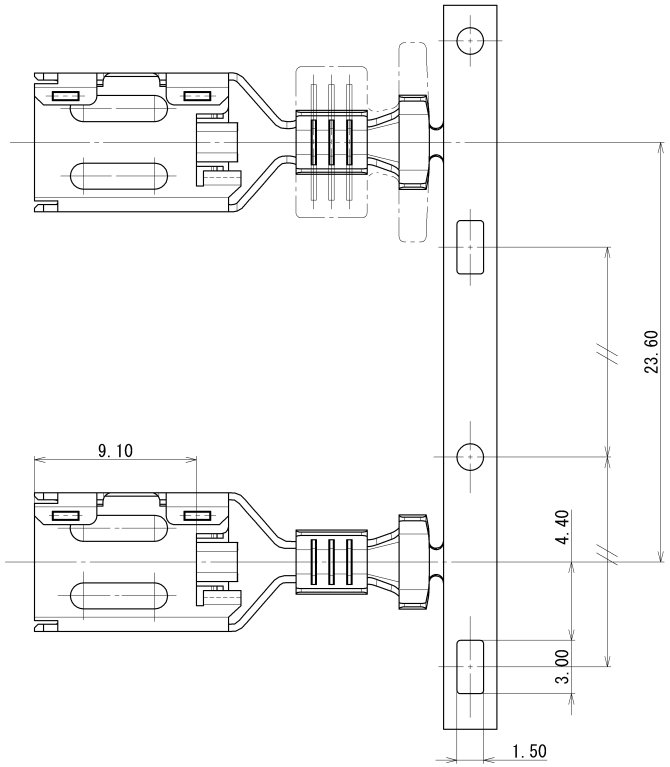


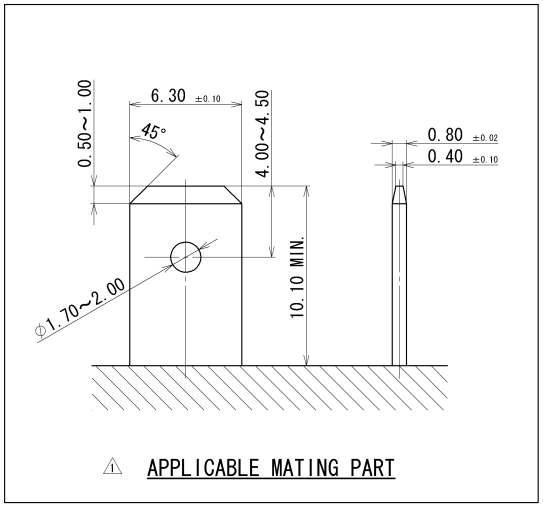


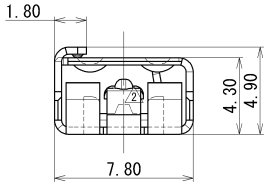


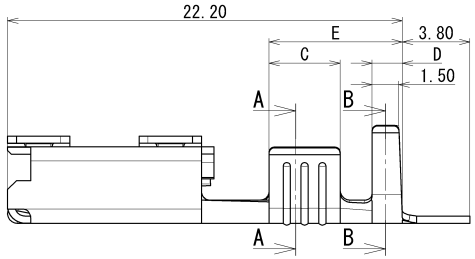


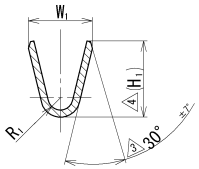


SEC. A-A

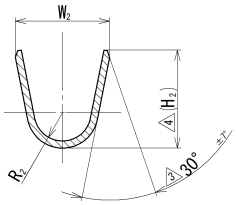


SEC. B-B

| LET | DATE | REVISION RECORD | NO. | CHKD |
|---|---|---|---|---|
| △4 | 2013/02/21 | UPDATE OF DRAWING ETC. | C13-Z096 | J.C |
| △3 | 2002/04/12 | CHANGED DIMENSION | C02-X446 | K.S |
| △2 | 1995/10/02 | CHANGED FORM, A | C95-M553 | Y.Y |
| △1 | 1992/08/20 | ADDITIONAL APPLICABLE | C92-6802 | I.K |
| | 1990/12/13 | NEW | C90-7811 | I.K |

| GENERAL TOLERANCE | | | | | | | |
|---|---|---|---|---|---|---|---|
| | 10MAX | 50MAX | 100MAX | 250MAX | 2500VR | ANGLE | ECCENT |
| A | ±0.15 | ±0.2 | ±0.3 | ±0.5 | ±0.75 | ±30' | 0.1 |
| B | ±0.2 | ±0.3 | ±0.55 | ±0.95 | ±1.4 | ±30' | 0.1 |
| Ⓒ | ±0.3 | ±0.5 | ±0.8 | ±1.4 | ±2 | ±30' | 0.15 |
| SPECIFIED | | | | | | MASS | g |

| | | | | | |
|---|---|---|---|---|---|
| CUSTOMER | | | | | |
| CUSTOMER PART NO. | CUSTOMER DWG NO. | | | | |
| OFFICE | TRIAL PART NO. | | | | |
| VENDOR | | | | | |
| VENDOR NO. | | | | | |
| DWG TYPE | DWG SOURCE | DWG DATE | UNIT | SCL | ANGLE |
| R | NEW | 1990/12/13 | mm | 5:1 | 3 |
| APPROVED | CHECKED | CHECKED | DESIGN | DRAWN | |
| K. SUZUKI | H. SHIBATA | | KAMEYAMA | J. CANDO | |
| 2013/02/21 | 2013/02/21 | | 1990/12/13 | 2013/02/21 | |

MATL. SPEC. SEE TABLE

TREAT. & FIN.

NAME SEL 250 TYPE TERMINAL FEMALE

PART NO. / CH. CODE 7116-2951 ETC.

DWG NO. 7116-2951:R

SET DWG NO.

YAZAKI CORPORATION

ISSUE MARK