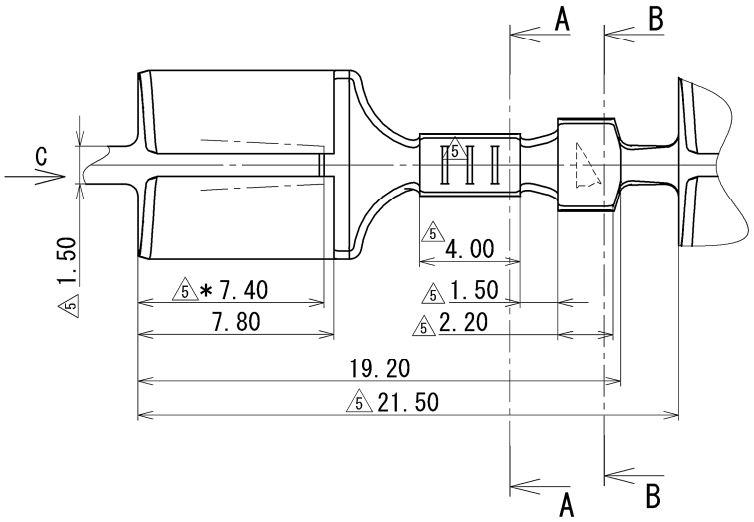

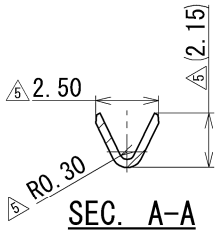

SEC. A-A

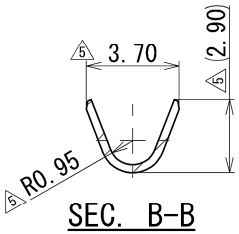

SEC. B-B

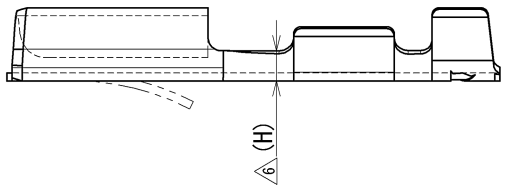

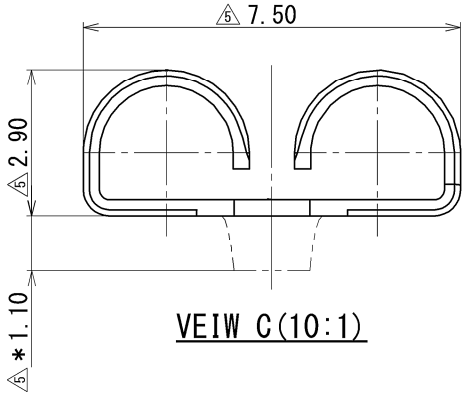

VEIW C(10:1)

	YAZAKI PART NO. AND CH. CODE	(H)	MATERIAL	APPLICABLE WIRE SIZE
3	7116-2095 (7B16-2095)	1.20	4 BRASS t=0.32	5 AVS 0.3 ～ 0.5
3	7116-2095-02	1.20	BRASS t=0.32 TIN PLATING	5 AVS 0.3 ～ 0.5
3	7116-2640 (7B16-2640)	1.20	4 BRASS t=0.32	5 AVS 0.3 ～ 0.5
3	6 7116-2640-02, A 6 (7B16-2640-02, A)	1.50	BRASS t=0.32 TIN PLATING	5 AVS 0.3 ～ 0.5

注記

6 1. 取扱説明書 NO.:YPES-15-011,YPES-15-099

3 2. ( )内の品番はA/B回路及び特別管理回路に使用すること。

5 3. ※印寸法は7116-2095,7116-2095-02の品番のみに適用し、
その他の品番のものにはランスを付けないこと。

NOTES

6 1. HANDLING MANUAL NO. : YPES-15-011,YPES-15-099

3 2. PART NUMBERS IN PARENTHESIS SHALL BE USED FOR AIR BAG (A/B) CIRCUITS AND OTHER CIRCUITS DESIGNATED FOR SPECIAL MONITOR.

5 3. * DENOTES DIMENSION APPLICABLE TO 7116-2095, 7116-2095-02 ONLY. AND OTHER PRODUCTS OF OTHER PART NO'S SHOULD NOT HAVE A LANCE.

LET	DATE	REVISION RECORD	NO.	CHKD
6	2016/06/30	CHANGED FORM ,ETC.	C16-P280	Y.H
5	1996/12/10	CAD DRAW & CHANGED FORM	C96-N239	M.T
4	1992/02/11	誤記訂正	C92-6200	半田
3	1990/09/14	注記・品番追加	C90-7309	半田
2	1988/06/17	形状変更	8MC-0612	石神
1	1983/05/04	注記変更	C83-5674	福田
	1981/08/03	NEW	C81-2644	竹之内

ISSUE MARK

GENERAL TOLERANCE

	10MAX	50MAX	100MAX	250MAX	2500VR	ANGLE	ECCENT
A	±0.15	±0.2	±0.3	±0.5	±0.75	±30'	0.1
B	±0.2	±0.3	±0.55	±0.95	±1.4	±30'	0.1
C	±0.3	±0.5	±0.8	±1.4	±2	±30'	0.15

SPECIFIED

MASS g

CUSTOMER	
CUSTOMER PART NO.	CUSTOMER DWG NO.
OFFICE	TRIAL PART NO.
VENDOR	
VENDOR NO.	

DWG TYPE	DWG SOURCE	DWG DATE	UNIT	SCL	ANGLE
R	NEW	1981/08/03	mm	5:1	3

APPROVED	CHECKED	CHECKED	DESIGN	DRAWN
S.SUZUKI	M.NAGANO	Y.IKEDA		Y.HANAI
2016/06/30	2016/06/30	2016/06/30		2016/06/30

MATL. SPEC. SEE TABLE

TREAT. & FIN.

NAME 6.3 TERMINAL FEMALE

PART NO. CH. CODE 5 7116-2640(7B16-2640) ETC.

DWG NO. 7116-2095:R

SET DWG NO.

YAZAKI CORPORATION