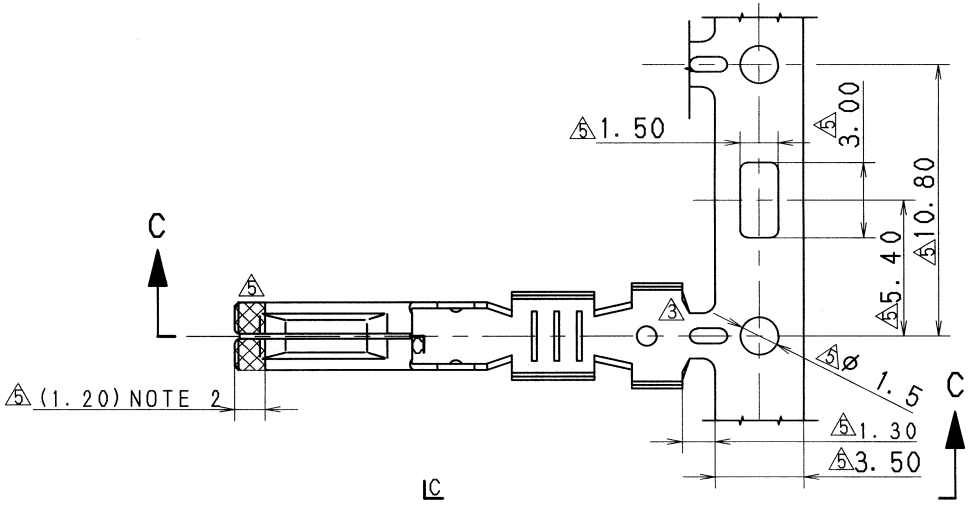

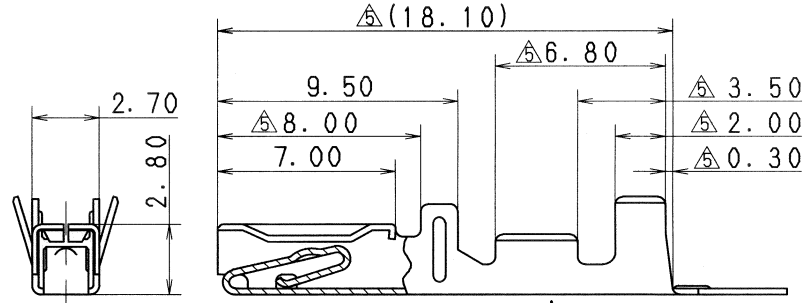

SEC. C-C

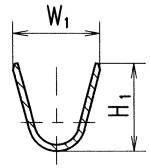

SEC. A-A

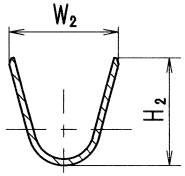

SEC. B-B

PART NO. AND CH. CODE	5 TREAT & FIN.	H_1	H_2	W_1	W_2	5 WIRE SIZE
5 7116-1473 (7B16-1473)	TIN PLATING	2.40	3.80	2.60	4.20	AVS0.3, 0.5, 0.85 CAVS0.5, 0.85
7116-1473-08	GOLD PLATING					
7116-1474	TIN PLATING	4 3.10	4.30	3.20	4.30	AVS1.25, CAVS1.25 AVSS 2
7116-1474-08	GOLD PLATING					
5 7116-1573-08 5 (7B16-1573-08)	GOLD PLATING	2.40	3.80	2.60	4.20	ABAVX0.75f
6 7116-1533-02	TIN PLATING	3.70	4.30	3.40	4.30	AVS1.25, CAVS1.25 AVSS 2
6 7116-1533-08	GOLD PLATING					

5 注記

1. 嵌合相手品番：7114-1470 ETC.
   7114-9638-08 (7B14-9638-08)
2. 7116-1573-08 (7B16-1573-08)
   だけにおいて、▩ 指示部に金フラッシュめっきを施すこと。
3. ( ) 内品番は、エアバッグ (A/B) 回路及び特別管理回路に使用する時に適用すること。

5 NOTES

1. MATING PART NO. :7114-1470 ETC.
   7114-9638-08 (7B14-9638-08)
2. 7116-1573-08 (7B16-1573-08) ONLY SHALL BE PLATED BY GOLD FLASH. GOLD FLASH PLATING SHALL BE IDENTIFIABLE DURING VISUAL INSPECTION.
3. PART NUMBERS IN PARENTHESIS SHALL BE USED FOR AIR BAG (A/B) CIRCUITS AND OTHER CIRCUITS DESIGNATED FOR SPECIAL MONITORING.

LET	DATE	REVISION RECORD	NO.	CHKD
6	06/11/23	ADDED PART NO., ETC.	C06-ZC72	S. S
5	05/03/14	CHANGED FORM, ETC.	C05-Z434	E. S
4	91/04/19	CHANGED NOTE	C91-6660	H. S
3	90/08/20	ADDED TABLE ETC.	C90-7054	H. Y
2	90/02/01	公差変更	C90-6119	M. K
1	89/12/19	誤記訂正	C89-7641	半田
	87/03/10	新設	7MC-0120	T. W

ISSUE MARK

GENERAL TOLERANCE

	10MAX	50MAX	100MAX	250MAX	2500VR	ANGLE	ECCENT
A	±0.15	±0.2	±0.3	±0.5	±0.75	±30′	0.1
B	±0.2	±0.3	±0.55	±0.95	±1.4	±30′	0.1
Ⓒ	±0.3	±0.5	±0.8	±1.4	±2	±30′	0.15

SPECIFIED

MASS g

CUSTOMER

CUSTOMER PART NO. | CUSTOMER DWG NO.

OFFICE | TRIAL PART NO.

VENDOR

VENDOR NO.

DWG TYPE	DWG SOURCE	DWG DATE	UNIT	SCL	ANGLE
R	NEW	87/03/10	mm	5 5:1	3

APPROVED	CHECKED	CHECKED	DESIGN	DRAWN
上/山	—	(鈴木(明))	T. W	S. SANTOS
'06.11.24		'06.11.23	87/03/10	06/11/23

MATL. SPEC. 5 COPPER ALLOY (t=0.25)

TREAT. & FIN. 5 SEE TABLE

NAME 070 TYPE TERMINAL F 3

PART NO. CH. CODE 7116-1473 ETC. (7B16-1473 ETC.) 5

DWG NO. 7116-1473:R

SET DWG NO.

YAZAKI CORPORATION