PART NO. AND CH. CODE	D	E	F	G	WIRE SIZE
7116-1420	7.00	10.50	2.00	5.20	AVS 0.3~AVS 0.5 EQUIVALENT
7116-1421	3.40	12.30	3.10	6.10	AVS 0.85~AVX 2 EQUIVALENT

NOTES

1. MATING PART NO. :7114-1420 ETC.
2. △2 APPLICABLE RUBBER STOPPER NO. :7157-3648 ETC.

注 記

1. 嵌合相手品番:7114-1420 ETC.
2. △2 適用ゴム栓品番:7157-3648 ETC.

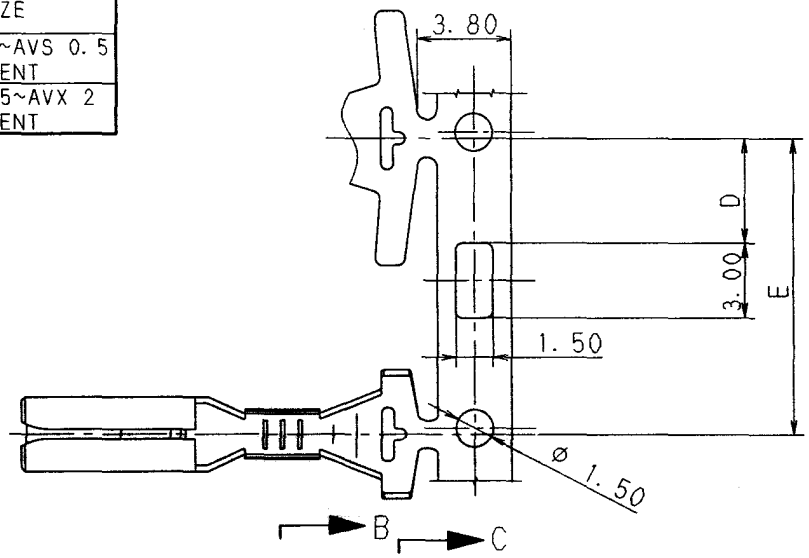

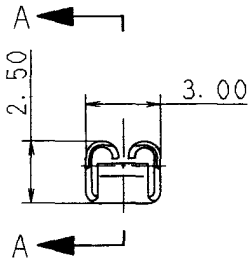

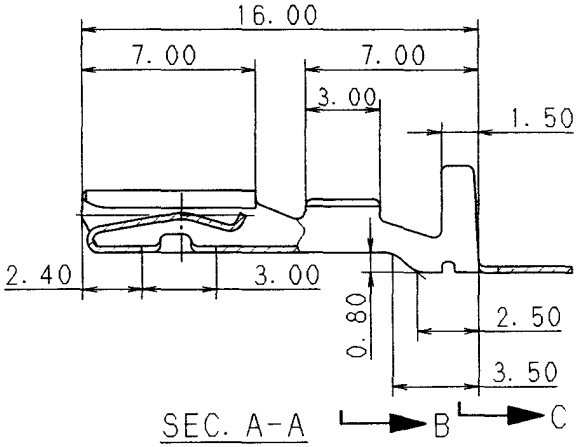

SEC. A-A

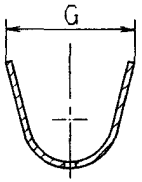

SEC. C-C

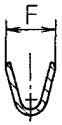

SEC. B-B

ISSUE MARK

LET	DATE	REVISION RECORD	NO.	CHKD
△2	00.01.28	CHANGED NOTE	C00-L148	C.T
△1	87.01.09	CHANGED NOTE & RENEW	7MC-0009	A.M
	85.05.17	NEW	C85-5489	Y.K

GENERAL TOLERANCE

	10MAX	50MAX	100MAX	250MAX	2500VR	ANGLE	ECCENT
A	±0.15	±0.2	±0.3	±0.5	±0.75	±30'	0.1
B	±0.2	±0.3	±0.55	±0.95	±1.4	±30'	0.1
Ⓒ	±0.3	±0.5	±0.8	±1.4	±2	±30'	0.15

SPECIFIED

MASS g

CUSTOMER

CUSTOMER PART NO.

CUSTOMER DWG NO.

OFFICE

TRIAL PART NO.

VENDOR

VENDOR NO.

DWG TYPE	DWG SOURCE	DWG DATE	UNIT	SCL	ANGLE
R	NEW	85.05.17	mm	5/1	3

APPROVED	CHECKED	CHECKED	DESIGN	DRAWN
加藤	山梨	多鈴	A. MAEDA	KIKUCHI 杉山
'00.02.17	00.02.15	'00.02.08	85.05.17	00.01.28

MATL. COPPER ALLOY (t=0.25) SPEC. TIN PLATING

TREAT. & FIN.

NAME 090 W/P TERMINAL FEMALE

PART NO. CH. CODE 7116-1420 ETC.

DWG NO. 7116-1420:R

SET DWG NO.

YAZAKI CORPORATION