GENERAL TOLERANCE											
	10 MAX	50 MAX	100 MAX	250 MAX	250 OVR	R5 MAX	R10 MAX	R20 MAX	R20 OVR	ANGLE	ECCENT
A	±0.15	±0.2	±0.3	±0.5	±0.75	±0.2	±0.3	±0.5	±2.5	±3°	0.1
B	±0.2	±0.3	±0.55	±0.95	±1.4					±3°	0.1
C	±0.3	±0.5	±0.8	±1.4	±2					±3°	0.15

PART NO. AND CH. CODE	W1	H1	W2	H2	L	APPLICABLE WIRE SIZE
7114-7386-02	2.60	(2.35)	3.70	(2.90)	9.00	1 CIVUS 0.35sq～CAVS 0.50sq
7114-7387-02	3.15	(2.90)	4.20	(3.50)	9.00	4 CIVUS 0.75sq～CAVS 1.25sq AVS 0.85sq, ALVUS 0.75sq～1.00sq
7114-7388-02	4.20	(3.30)	4.50	(3.75)	9.90	5 AVSS 2.00sq ALVUS 1.50sq～ALVSS 2.50sq
7114-7531-02	1.70	(1.80)	2.35	(2.45)	9.00	CIVUS 0.13sq～CHFUS 0.22sq

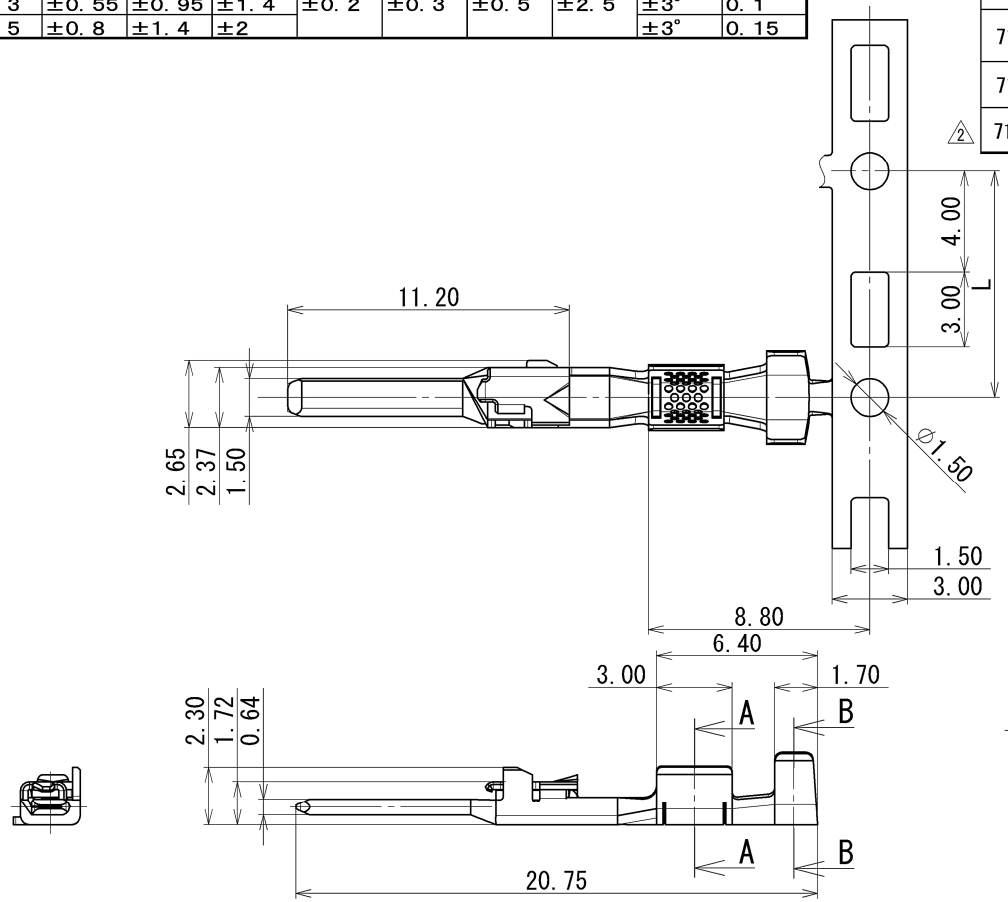

注記

1. 相手端子品番　：7116-7389-02 ETC.
2. 適用電線サイズ：　表参照
5. 2.5sq加締め部を樹脂で覆う場合は適用外とする。

NOTES

1. FEMALE COUNTERPART NO. : 7116-7389-02 ETC.
2. APPLICABLE WIRE SIZE : SEE TABLE
5. NOT APPLICABLE IF CRIMPED PART WITH 2.5sq WIRE IS COVERED WITH RESIN.

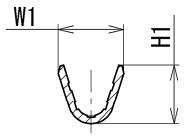

SEC. A-A

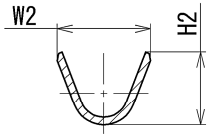

SEC. B-B

LET	DATE	REVISION RECORD	NO.	CHKD
5	2017/03/22	CHANGED APPLICABLE WIRE SIZE ETC.	C17-P067	Y.H
4	2016/07/27	ADDED APPLICABLE WIRE SIZE	C16-P319	T.M
3	2013/01/31	DELETED PART NO. ETC.	C13-Z051	E.O
2	2012/12/07	ADDED PART NO. ETC.	C12-Z942	E.O
1	2012/05/25	CHANGED APPLICABLE WIRE SIZE ETC.	C12-Z463	J.C
	2011/12/20	NEW	C11-Z712	T.F

ISSUE MARK

GENERAL TOLERANCE							
	10MAX	50MAX	100MAX	250MAX	250OVR	ANGLE	ECCENT
A	±0.15	±0.2	±0.3	±0.5	±0.75	±30'	0.1
B	±0.2	±0.3	±0.55	±0.95	±1.4	±30'	0.1
C	±0.3	±0.5	±0.8	±1.4	±2	±30'	0.15

SPECIFIED　　MASS

CUSTOMER						
CUSTOMER PART NO.		CUSTOMER DWG NO.				
OFFICE		TRIAL PART NO.				
VENDOR						
VENDOR NO.						
DWG TYPE	DWG SOURCE	DWG DATE	UNIT	SCL	ANGLE	
R	NEW	2011/12/20	mm	5:1	3	
APPROVED	CHECKED	CHECKED	DESIGN	DRAWN		
T.MATSUNAGA			K.MATSUMURA	Y.HANAI		
2017/03/22			2011/09/11	2017/03/22		

MATL. SPEC.: BRASS(t=0.3) TIN PLATING　TREAT. & FIN.

NAME: 060 TERMINAL MALE

PART NO. CH. CODE: 7114-7386-02 ETC.

DWG NO.: 7114-7386-02:R　SET DWG NO.

YAZAKI CORPORATION