③GENERAL TOLERANCE	10MAX	50MAX	100MAX	250MAX	2500VR	R5MAX	R10MAX	R20MAX	R200VR	ANGLE	ECCENT
A	±0.15	±0.2	±0.3	±0.5	±0.75	±0.2	±0.3	±0.5	±2.5	±3°	0.1
B	±0.2	±0.3	±0.55	±0.95	±1.4					±3°	0.1
Ⓒ	±0.3	±0.5	±0.8	±1.4	±2					±3°	0.15

PART NO. AND CH. CODE	A_1	A_2	R_1	R_2	H_1	H_2	③M	WIRE SIZE (mm²)
7114-4102-08,Ⓐ	2.50	4.85	0.45	1.45	(2.40)	(4.20)	0.55	①0.3 ~ 0.5 EQUIVALENT
7114-4103-08,Ⓐ	3.30	5.00	0.65		(3.20)	(4.45)	0.70	①0.6 ~ 1.25 EQUIVALENT

注記

1) 材質: 銅合金 t=0.30
2) 適用ゴム栓品番 : 7158-3030-50 ETC.
3) 嵌合相手端子品番: 7116-4102-08 ETC.

NOTES

1) MATERIAL: COPPER ALLOY t=0.30
2) APPLICABLE WIRE SEAL NO. : 7158-3030-50 ETC.
3) MATING TERMINAL NO. : 7116-4102-08 ETC.

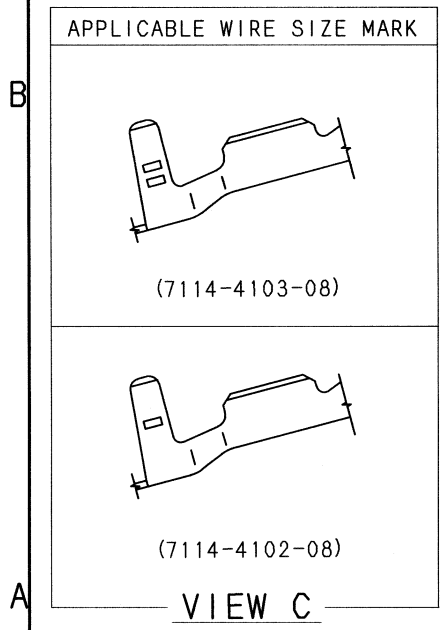

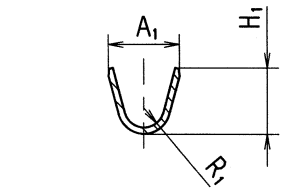

SEC. A-A

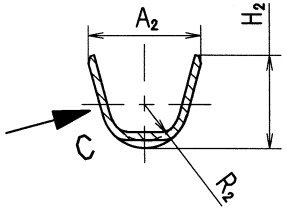

SEC. B-B

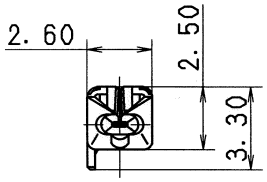

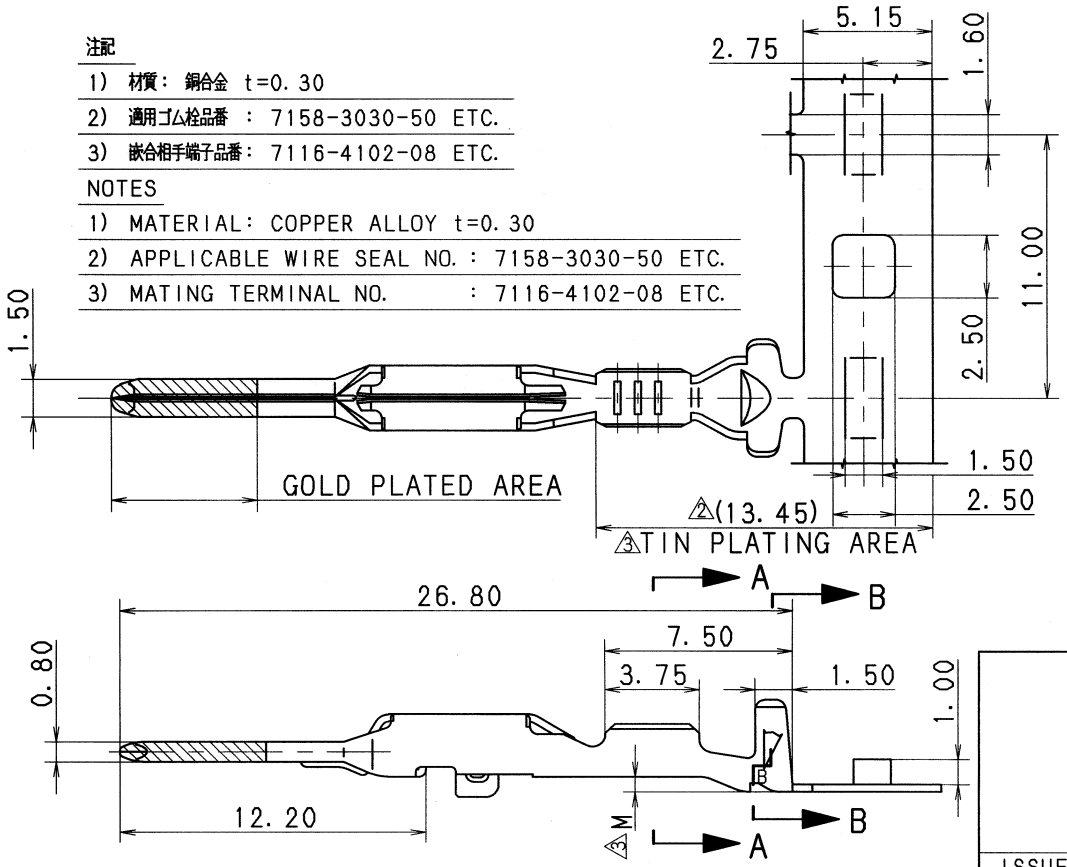

LET	DATE	REVISION RECORD	NO.	CHKD
③	05/12/14	DELETED SOLDER PLATING INSTRUCTION, ETC.	C05-ZG57	Y. W
②	03/09/19	ADDED DIMENSION,Ⓐ	C03-X584	H. T
①	03/07/07	CHANGED WIRE SIZE	C03-X434	K. O
	96/03/15	NEW	C96-6049	Y. T

GENERAL TOLERANCE	10MAX	50MAX	100MAX	250MAX	2500VR	ANGLE	ECCENT
A	±0.15	±0.2	±0.3	±0.5	±0.75	±30′	0.1
B	±0.2	±0.3	±0.55	±0.95	±1.4	±30′	0.1
C	±0.3	±0.5	±0.8	±1.4	±2	±30′	0.15

SPECIFIED

MASS g

CUSTOMER					
CUSTOMER PART NO.		CUSTOMER DWG NO.			
OFFICE		TRIAL PART NO.			
VENDOR					
VENDOR NO.					
DWG TYPE	DWG SOURCE	DWG DATE	UNIT	SCL	ANGLE
R	NEW	96/03/15	mm	5:1	3
APPROVED	CHECKED	CHECKED	DESIGN	DRAWN	
土山	和田	酒井	Y. TOMITA	O. DAR KOMEL SALIZA	
'05.12.22	05.12.22	'05.12.21	96/03/15	05/12/14	

ISSUE MARK

MATL. SPEC. SEE NOTES

TREAT. & FIN.

NAME 1.5 SYSTEM SEALED CONNECTOR MALE TERMINAL (GOLD PLATED)

PART NO. CH. CODE 7114-4102-08 ETC.

DWG NO. 7114-4102-08:R

SET DWG NO.

YAZAKI CORPORATION