PART NO. AND CH. CODE	W_1 ±0.4	W_2 ±0.4	④ H_1	④ H_2	A	B	X	Y	WIRE SIZE
7114-4052-08, Ⓒ ②(7B14-4052-08)	2.60	3.70	(2.44)	(3.30)	3.00	6.20	2.80	8.40	AVSS 0.3~AVS 0.5 EQIVALENT
7114-4053-08, Ⓒ ②(7B14-4053-08)	3.30	4.60	(3.07)	(4.01)	4.00	7.20	8.00	10.00	AVS 0.5~AVS 1.25 EQIVALENT

注記

④ 1. 材質 :C2600 t=0.30

処理 :ニッケル下地めっき

⑤ 金めっき

③ 錫めっき

④ 2. 嵌合相手品番:7116-4052-08 ETC.

(7B16-4052-08 ETC.)

③ 3. ( ) 内品番は、エアバッグ(A/B)回路及び別管理回路に使用する時に適用すること。

NOTES

④ 1. MATERIAL :C2600 t=0.30

TREATMENT:NICKEL UNDER PLATING

⑤ GOLD PLATING

③ TIN PLATING

④ 2. MATING PART NO. :7116-4052-08 ETC.

(7B16-4052-08 ETC.)

③ 3. PART NUMBERS IN PARENTHESIS SHALL BE USED FOR AIR BAG (A/B) CIRCUITS AND OTHER CIRCUITS DESIGNATED FORSPECIAL MONITORING.

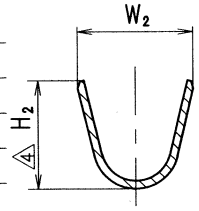

SEC. Q-Q

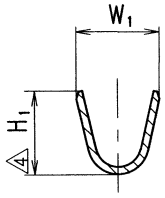

SEC. P-P

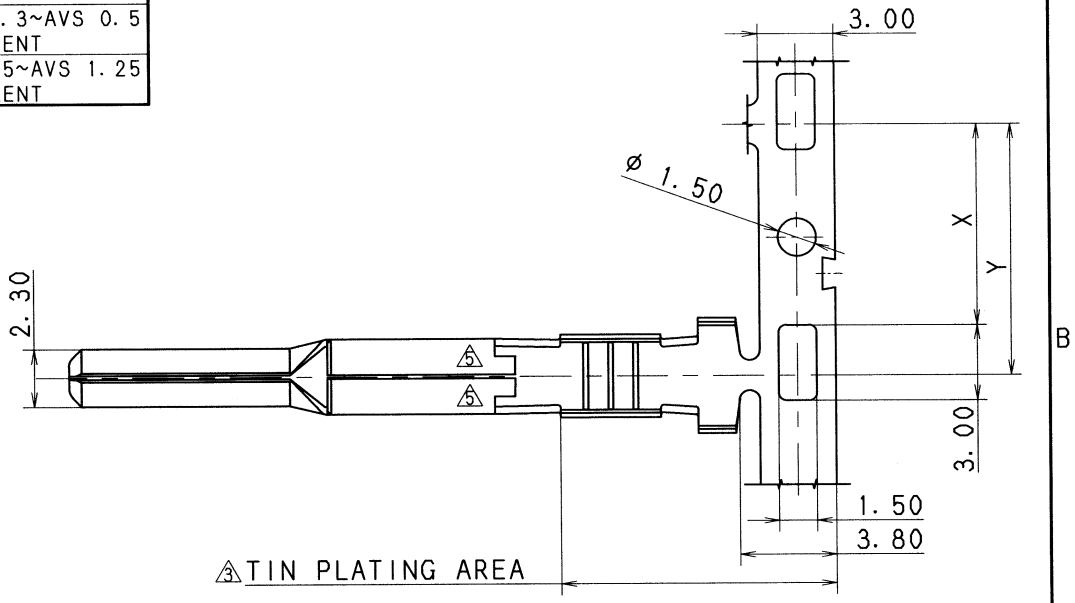

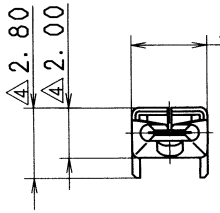

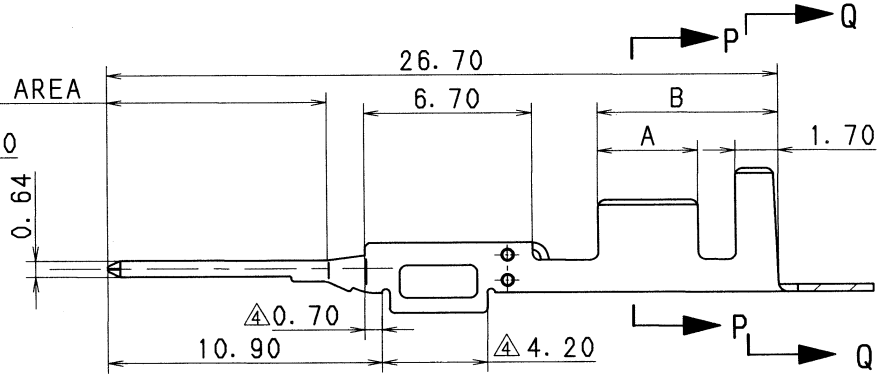

LET	DATE	REVISION RECORD	NO.	CHKD
⑤	01.01.29	CHANGED PLATING, Ⓒ	C01-X033	E.F
④	98.07.18	CHANGED NOTE & DIMENSION	C97-N453	H.K
③	97.09.12	CHANGED PLATING, Ⓑ	C97-M928	H.K
②	96.05.16	ADDED A/B PART NO., Ⓐ	C96-L960	M.T
①	92.03.12	CORRECTED AN ERROR IN WRITING	C92-6321	H.K
	92.03.10	NEW	C92-6279	H.K

ISSUE MARK

GENERAL TOLERANCE

	10MAX	50MAX	100MAX	250MAX	2500VR	ANGLE	ECCENT
A	±0.15	±0.2	±0.3	±0.5	±0.75	±30′	0.1
B	±0.2	±0.3	±0.55	±0.95	±1.4	±30′	0.1
Ⓒ	±0.3	±0.5	±0.8	±1.4	±2	±30′	0.15

SPECIFIED

MASS g

CUSTOMER

CUSTOMER PART NO. | CUSTOMER DWG NO.

OFFICE | TRIAL PART NO.

VENDOR

VENDOR NO.

DWG TYPE	DWG SOURCE	DWG DATE	UNIT	SCL	ANGLE
R	NEW	92.03.03	mm	5/1	3

APPROVED	CHECKED	CHECKED	DESIGN	DRAWN
加藤	山梨	髙福	A. MAEDA	ISHIJIMA 杉山じ
'01.02.06	01.02.05	01.01.31	90.10.18	01.01.29

MATL. SPEC. SEE NOTES | TREAT. & FIN. SEE NOTES

NAME 090Ⅱ TERMINAL MALE

⑤(GOLD PLATING)

PART NO. CH. CODE 7114-4052-08 ETC. ②(7B14-4052-08 ETC.)

DWG NO. 7114-4052-08:R | SET DWG NO.

YAZAKI CORPORATION