PART NO.	MATERIAL
7114-1847-02	COPPER ALLOY TIN PLATING
7114-1847-08	COPPER ALLOY GOLD PLATING

注記

1. 嵌合雌端子品番 : 7116-1847-02 ETC.
2. 適用電線サイズ : CAVS 0.3~0.5
   AVSSH 0.3~0.5

NOTES

1. MATING FEMALE TERMINAL NO. : 7116-1847-02 ETC.
2. APPLICABLE WIRE SIZE : CAVS 0.3~0.5
   AVSSH 0.3~0.5

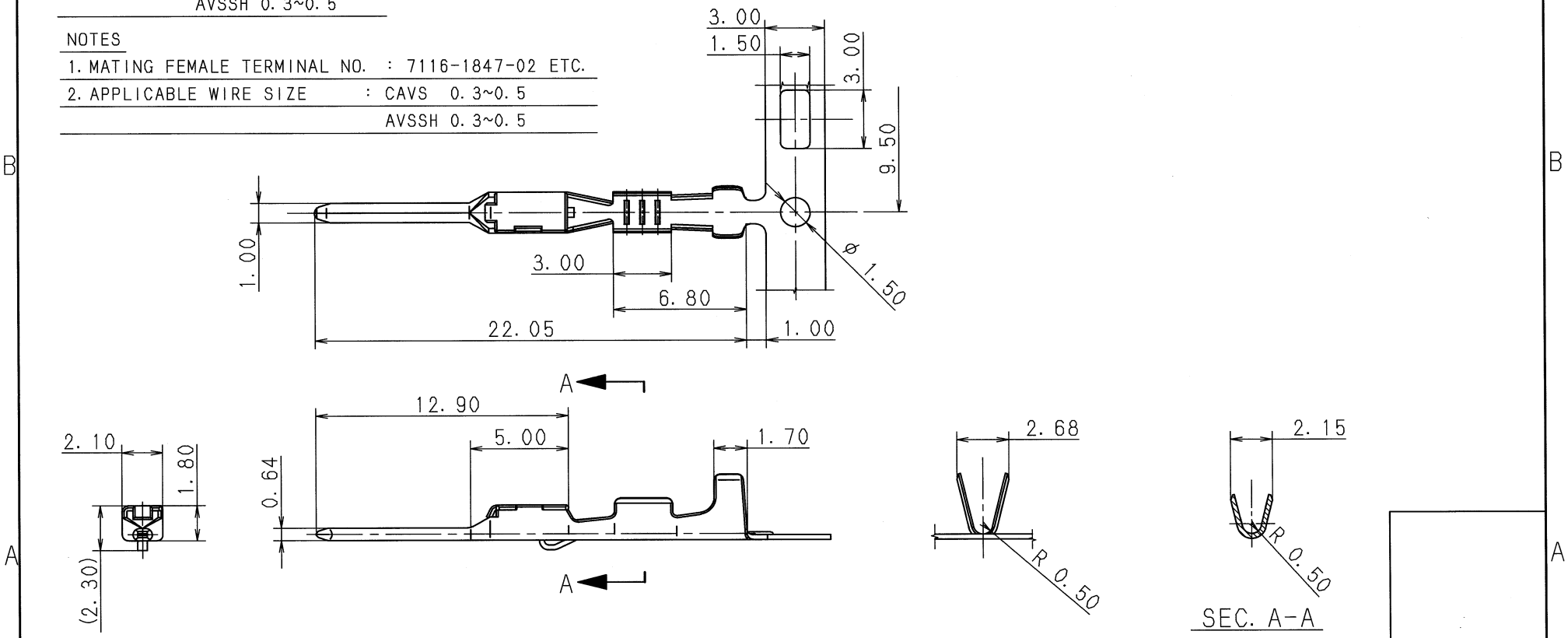

ISSUE MARK

LET	DATE	REVISION RECORD	NO.	CHKD
	02.11.04	NEW	C02-X569	T.H

GENERAL TOLERANCE

	10MAX	50MAX	100MAX	250MAX	2500VR	ANGLE	ECCENT
A	±0.15	±0.2	±0.3	±0.5	±0.75	±30′	0.1
B	±0.2	±0.3	±0.55	±0.95	±1.4	±30′	0.1
Ⓒ	±0.3	±0.5	±0.8	±1.4	±2	±30′	0.15

SPECIFIED

MASS g

CUSTOMER
CUSTOMER PART NO. | CUSTOMER DWG NO.
OFFICE | TRIAL PART NO.
VENDOR
VENDOR NO.

DWG TYPE	DWG SOURCE	DWG DATE	UNIT	SCL	ANGLE
R	NEW	02.11.04	mm	5/1	3

APPROVED	CHECKED	CHECKED	DESIGN	DRAWN
竹之内	大橋 藤	濱井	T. HAMAI	K. WACHI
02.11.13	02.11.12	02.11.05	02.04.25	02.11.04

MATL. SPEC. SEE TABLE (t=0.25)
TREAT. & FIN.

NAME RK-TYPE TERMINAL MALE (MAT SEAL)

PART NO. / CH. CODE 7114-1847-02 ETC.

DWG NO. 7114-1847-02:R
SET DWG NO.

YAZAKI CORPORATION