△2 GENERAL TOLERANCE							
	10 MAX	50 MAX	100 MAX	150 MAX	200 MAX	200 OVR	ANGLE
Ⓐ	±0.2	±0.3	±0.5	±0.8	±1.0	±1.4	±30'
B	±0.3	±0.5	±0.8	±1.0	±1.4	±2.0	±30'
C	±0.5	±0.8	±1.0	±1.4	±1.6	±2.0	±1°

△2 YAZAKI PART NO. AND CH. CODE	△2 PART NAME	APPLICABLE WIRE SIZE	△2 MATERIAL	TREAT. & FIN.
7114-1564-08 △2 (7B14-1564-08)	NSM-S-2Au NSM-0.76 Au A/B	AVS 0.85～1.25sq AVSS 2sq	COPPER ALLOY(t=0.32)	Au PLATING
7114-1563-08	NSM-0.3-2Au	AVS 0.3～0.5sq	COPPER ALLOY(t=0.32)	Au PLATING
7114-1562-08	NSM-S-Au	AVS 0.85～1.25sq AVSS 2sq	COPPER ALLOY(t=0.32)	Au PLATING
△2 7114-1561-R8	NSM-0.3-Au	AVS 0.3～0.5sq	COPPER ALLOY(t=0.32)	Au PLATING
7114-1536-02 △2 (7B14-1536-02)	NSM-S NSM-S A/B	AVS 0.85～1.25sq AVSS 2sq	COPPER ALLOY(t=0.32)	Sn PLATING
7114-1535-02 △2 (7B14-1535-02)	NSM-0.3 NSM-0.3 A/B	AVS 0.3～0.5sq	COPPER ALLOY(t=0.32)	Sn PLATING

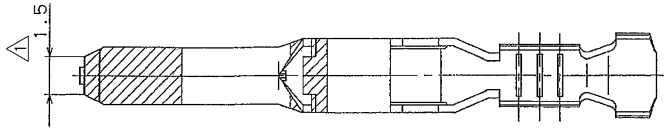

注記

1. 金めっき仕様端子については、ハッチング部に金めっきを施す。
2. この部位の金めっきは、0.38μmの仕様にのみ適用とする。
△2 3. ( ) 内品番は、エアバッグ (A/B) 回路及び特別管理回路に使用する時に適用すること。
△2 4. 7114-1561-R8は金メッキは、鉛フリー仕様である。

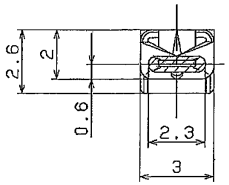

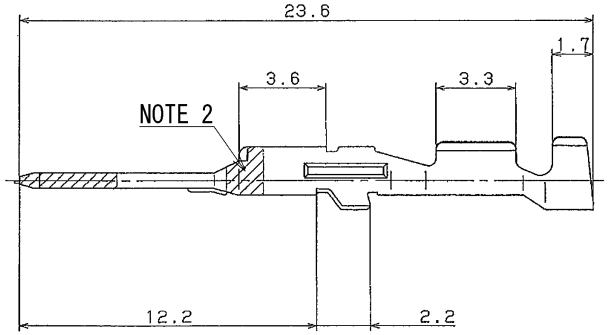

NOTES

△2 1. IN RELATION TO GOLD PLATING SPECIFICATION TERMINAL, APPLY GOLD PLATING TO THE HATCHING PART
△2 2. THE REQUIRED GOLD PLATING ON THIS PART IS 0.38μm ONLY.
△2 3. PART NUMBERS IN PARENTHESIS SHALL BE USED FOR AIR BAG (A/B) CIRCUITS AND OTHER CIRCUITS DESIGNATED FOR SPECIAL MONITORING.
△2 4. THE GOLD PLATING SPECIFICATION FOR 7114-1561-R8 IS LEAD FREE.

ISSUE MARK

LET	DATE	REVISION RECORD	NO.	CHKD
△2	2011/09/05	CHANGED PART NO. ETC.	C11-Z436	J.V
△1	1995/09/29	CHANGED FORM	C95-M578	H.K
	1993/04/28	NEW	C93-L492	H.F

GENERAL TOLERANCE							
	10MAX	50MAX	100MAX	250MAX	2500VR	ANGLE	ECCENT
A	±0.15	±0.2	±0.3	±0.5	±0.75	±30'	0.1
B	±0.2	±0.3	±0.55	±0.95	±1.4	±30'	0.1
C	±0.3	±0.5	±0.8	±1.4	±2	±30'	0.15

SPECIFIED

MASS

CUSTOMER

CUSTOMER PART NO.

CUSTOMER DWG NO.

OFFICE

TRIAL PART NO.

VENDOR

VENDOR NO.

DWG TYPE	DWG SOURCE	DWG DATE	UNIT	SCL	ANGLE
R	△2 BORW	1993/04/28	mm	FREE	3

APPROVED	CHECKED	CHECKED	DESIGN	DRAWN
S.MIZUSE				J.VALDEZ
2011/09/05				2011/09/05

MATL. SPEC. SEE TABLE

TREAT. & FIN. △2 SEE TABLE

NAME NS TYPE TERMINAL MALE

PART NO. CH. CODE △2 7114-1535-02 ETC. (7B14-1535-02 ETC.)

DWG NO. 7114-1535-02:R

SET DWG NO.

YAZAKI CORPORATION