YAZAKI PART NO. AND CH. CODE	H1	W1	H2	W2	③T1	③T2	APPLICABLE WIRE SIZE	TREAT & FIN.
7114-1470 ②(7B14-1470)	2.5	2.6	3.9	4.2	10.0	5.0	AVS 0.3-0.85	TIN PLATING
7114-1470-08 ②(7B14-1470-08)								GOLD PLATING
7114-1475	3.2	3.2	4.2	4.3	11.2	5.6	AVS 1.25 AVSS 2.0	TIN PLATING
7114-1475-08								GOLD PLATING

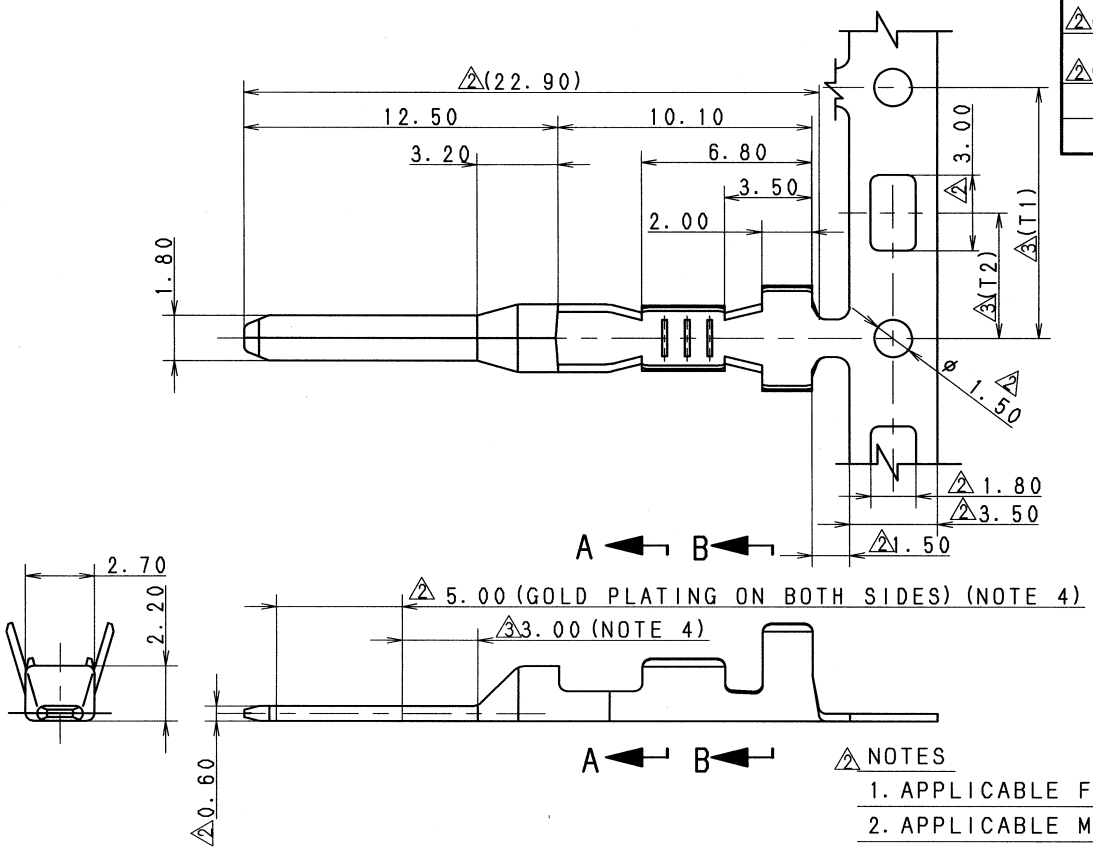

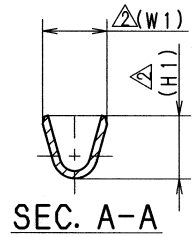

SEC. A-A

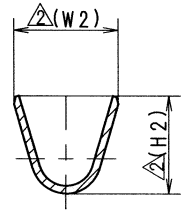

SEC. B-B

②注記

1. 嵌合雌ターミナル品番：7116-1470 ETC.
2. 適用雌ハウジング品番：7122-1965-30 ETC.
3. ( ) 内品番は、エアバッグ (A/B) 回路及び特別管理回路に使用する時に適用すること。
4. 本寸法は7114-1470-08 (7B14-1470-08) 及び7114-1475-08に適用。

②NOTES

1. APPLICABLE FEMALE TERMINAL NO. : 7116-1470 ETC.
2. APPLICABLE MALE HOUSING NO. : 7122-1965-30 ETC.
3. PART NUMBERS IN PARENTHESIS SHALL BE USED FOR AIR BAG (A/B) CIRCUITS AND OTHER CIRCUITS DESIGNATED FOR SPECIAL MONITORING.
4. THIS DIMENSION IS APPLIED TO 7114-1470-08 (7B14-1470-08) AND 7114-1475-08.

LET	DATE	REVISION RECORD	NO.	CHKD
③	07/05/10	ADDED DIMENSION, ETC.	C07-Z371	T. K
②	06/07/11	ADDED A/B PART NO., ETC.	C06-Z656	T. K
①	90/02/05	CHANGED TOLERANCE AND CORRECTION OF CLERICAL ERROR	C90-6120	M. K
	87/03/19	NEW	7MC-4042	H. S

①GENERAL TOLERANCE

	10MAX	50MAX	100MAX	250MAX	2500VR	ANGLE	ECCENT
A	±0.15	±0.2	±0.3	±0.5	±0.75	±30′	0.1
B	±0.2	±0.3	±0.55	±0.95	±1.4	±30′	0.1
Ⓒ	±0.3	±0.5	±0.8	±1.4	±2	±30′	0.15

SPECIFIED

MASS g

ISSUE MARK

CUSTOMER

CUSTOMER PART NO. | CUSTOMER DWG NO.

OFFICE | TRIAL PART NO.

VENDOR

VENDOR NO.

DWG TYPE	DWG SOURCE	DWG DATE	UNIT	SCL	ANGLE
R	NEW	87/03/19	mm	②5:1	3

APPROVED	CHECKED	CHECKED	DESIGN	DRAWN
平山(典)	(鈴木(慎)	小林	S. YAGI	C. AGCAOILI
'07.05.10	'07.05.10	'07.5.10	84/12/21	07/05/10

MATL. SPEC. BRASS (t=0.3)

TREAT. & FIN. SEE TABLE

NAME 070 TYPE TERMINAL MALE

PART NO. CH. CODE ②7114-1470 ETC. (7B14-1470 ETC.)

DWG NO. 7114-1470:R

SET DWG NO.

YAZAKI CORPORATION