NOTES

3 1. MATING PART NO. : 7116-1466-02 ETC. (7B16-1466-02 ETC.)

3 2. APPLICABLE WIRE SEAL NO. : 7158-3120-90 (7B58-3120-90)
7158-3121-80 (7B58-3121-80)

1 3. PART NUMBERS IN PARENTHESIS SHALL BE USED FOR AIR BAG (A/B) CIRCUITS AND OTHER CIRCUITS DESIGNATED FOR SPECIAL MONITORING.

1 4. Au PLATE IN * DIMENSION AREA (7B14-1466-08, 7B14-1469-08)

PART NO. AND CH. CODE	P	W	APPLICABLE WIRE SIZE	3 MATERIAL
7114-1466-02 3(7B14-1466-02)	2.15	3.95	CAVS 0.3~0.5 CAVUS 0.3~0.5	BRASS (t=0.25) TIN PLATING
7114-1466-08 1(7B14-1466-08)				BRASS (t=0.25) GOLD PLATING
7114-1469-02 3(7B14-1469-02)	2.65	4.10	CAVS 0.85 CAVUS 0.85	BRASS (t=0.25) TIN PLATING
7114-1469-08 1(7B14-1469-08)				BRASS (t=0.25) GOLD PLATING

注 記

3 1. 嵌合相手品番 : 7116-1466-02 ETC. (7B16-1466-02 ETC.)

3 2. 適用ゴム栓品番 : 7158-3120-90 (7B58-3120-90)
7158-3121-80 (7B58-3121-80)

1 3. ( ) 内品番は、エアーバック (A/B) 回路及び特別管理回路に使用する時に適用すること。

1 4. *寸法の金メッキ範囲は、7B14-1466-08, 7B14-1469-08のみ適用とする。

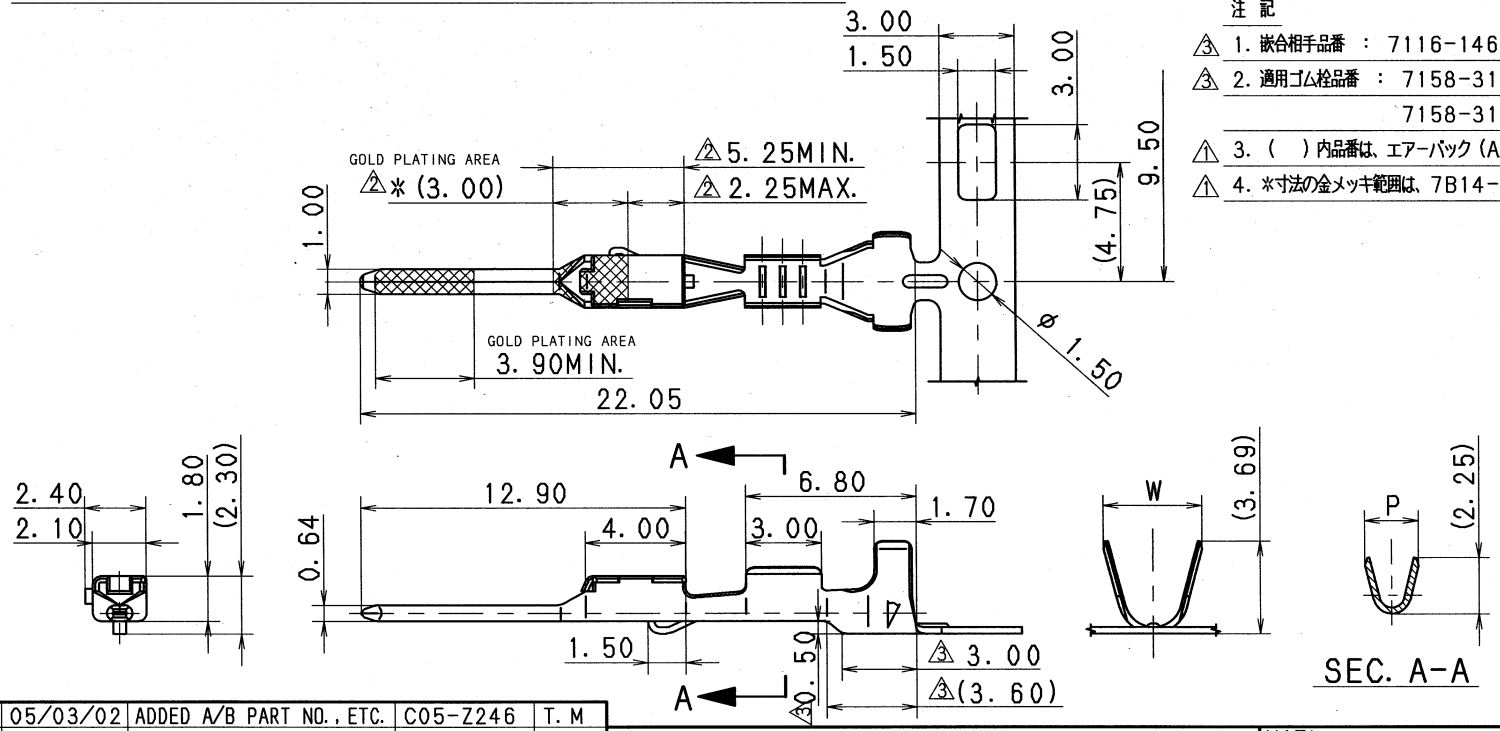

LET	DATE	REVISION RECORD	NO.	CHKD
3	05/03/02	ADDED A/B PART NO., ETC.	C05-Z246	T. M
2	00/08/21	CORRECTION OF A CLERICAL ERROR	C00-6778	M. F
1	00/01/19	CHANGED FORM ETC.	C00-L091	T. H
	98/03/19	NEW	C98-L459	M. I

GENERAL TOLERANCE

	10MAX	50MAX	100MAX	250MAX	2500VR	ANGLE	ECCENT
A	±0.15	±0.2	±0.3	±0.5	±0.75	±30′	0.1
B	±0.2	±0.3	±0.55	±0.95	±1.4	±30′	0.1
C	±0.3	±0.5	±0.8	±1.4	±2	±30′	0.15

SPECIFIED

MASS g

CUSTOMER
CUSTOMER PART NO. | CUSTOMER DWG NO.
OFFICE | TRIAL PART NO.
VENDOR
VENDOR NO.

DWG TYPE	DWG SOURCE	DWG DATE	UNIT	SCL	ANGLE
R	NEW	98/03/19	mm	5:1	3

APPROVED	CHECKED	CHECKED	DESIGN	DRAWN
平野	篠地	松田	M. TSUJI	E. PANTONI ROMEL GALIZA
05.03.02	05.03.02	05/03/02	96/02/19	05/03/02

MATL. SPEC. SEE TABLE
TREAT. & FIN. SEE TABLE

NAME RK-TYPE TERMINAL MALE

PART NO. CH. CODE 3 7114-1466-02 ETC. (7B14-1466-08 ETC.)

DWG NO. 7114-1466-02:R
SET DWG NO.

YAZAKI CORPORATION

ISSUE MARK