PART NO.	TREATMENT
7114-1446 (7B14-1446)	GOLD PLATING
△1 7114-1446-02	TIN PLATING

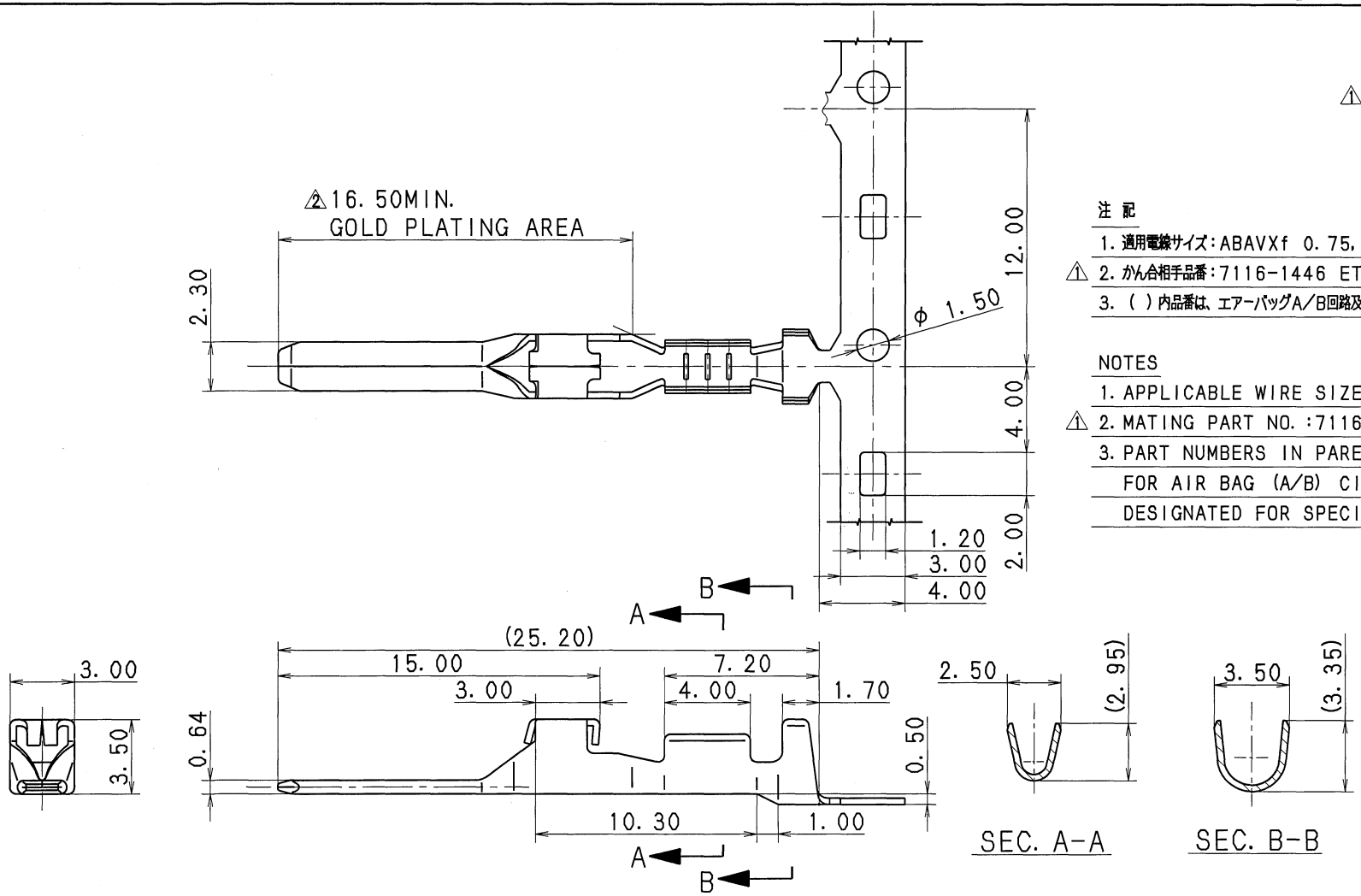

注 記

1. 適用電線サイズ：ABAVXf 0.75, 0.5
△1 2. かん合相手品番：7116-1446 ETC.
3. ( ) 内品番は、エアーバッグA／B回路及び特別管理回路に使用する時に適用すること。

NOTES

1. APPLICABLE WIRE SIZE:ABAVXf 0.75, 0.5
△1 2. MATING PART NO. :7116-1446 ETC.
3. PART NUMBERS IN PARENTHESIS SHALL BE USED FOR AIR BAG (A/B) CIRCUITS AND OTHER CIRCUITS DESIGNATED FOR SPECIAL MONITORING.

ISSUE MARK

LET	DATE	REVISION RECORD	NO.	CHKD
△2	12.09.25	CHANGED PART NAME, ETC.	C12-Z883	J.C
△1	98.02.09	ADDED PART NO.	C98-L261	A.H
	90.08.08	NEW	C90-L912	T.T

GENERAL TOLERANCE

	10MAX	50MAX	100MAX	250MAX	2500VR	ANGLE	ECCENT
A	±0.15	±0.2	±0.3	±0.5	±0.75	±30′	0.1
B	±0.2	±0.3	±0.55	±0.95	±1.4	±30′	0.1
Ⓒ	±0.3	±0.5	±0.8	±1.4	±2	±30′	0.15

SPECIFIED

MASS g

CUSTOMER

CUSTOMER PART NO. | CUSTOMER DWG NO.

OFFICE | TRIAL PART NO.

VENDOR

VENDOR NO.

DWG TYPE	DWG SOURCE	DWG DATE	UNIT	SCL	ANGLE
R	NEW	90.08.08	mm	5/1	3

APPROVED	CHECKED	CHECKED	DESIGN	DRAWN
K. SUZUKI	—	—	TAKAGISI	J. CANDO
12.09.25	—	—	90.04.11	12.09.25

MATL. SPEC. △2 BRASS (t=0.30)

TREAT. & FIN. △2 SEE TABLE

NAME △2 DDC TYPE

TERMINAL MALE

PART NO. CH. CODE △1 7114-1446 ETC. (7B14-1446)

DWG NO. 7114-1446:R

SET DWG NO.

YAZAKI CORPORATION