	YAZAKI PART NO.	APPLICABLE WIRE SIZE	H_1	H_2	W_1	W_2	MATL.&SPEC.
1	7114-1300 (7B14-1300)	AVS, CAVS 0.2~0.3sq	2.2	3.1	2.1	2.9	黄銅Snメッキ (t=0.30)
5 2 1	7114-1301 (7B14-1301)	AVS, CAVS 0.5~0.85sq	2.8	3.9	2.5	3.0	黄銅Snメッキ (t=0.30)
4	7114-1300-08	AVS, CAV 0.2~0.3sq	2.2	3.1	2.1	2.9	黄銅Auメッキ (t=0.30)
5 4	7114-1301-08	AVS, CAV 0.5~0.85sq	2.8	3.9	2.5	3.0	黄銅Auメッキ (t=0.30)
4	7114-1302	0.15sq専用	1.69	2.2	2.1	2.4	黄銅Snメッキ (t=0.30)

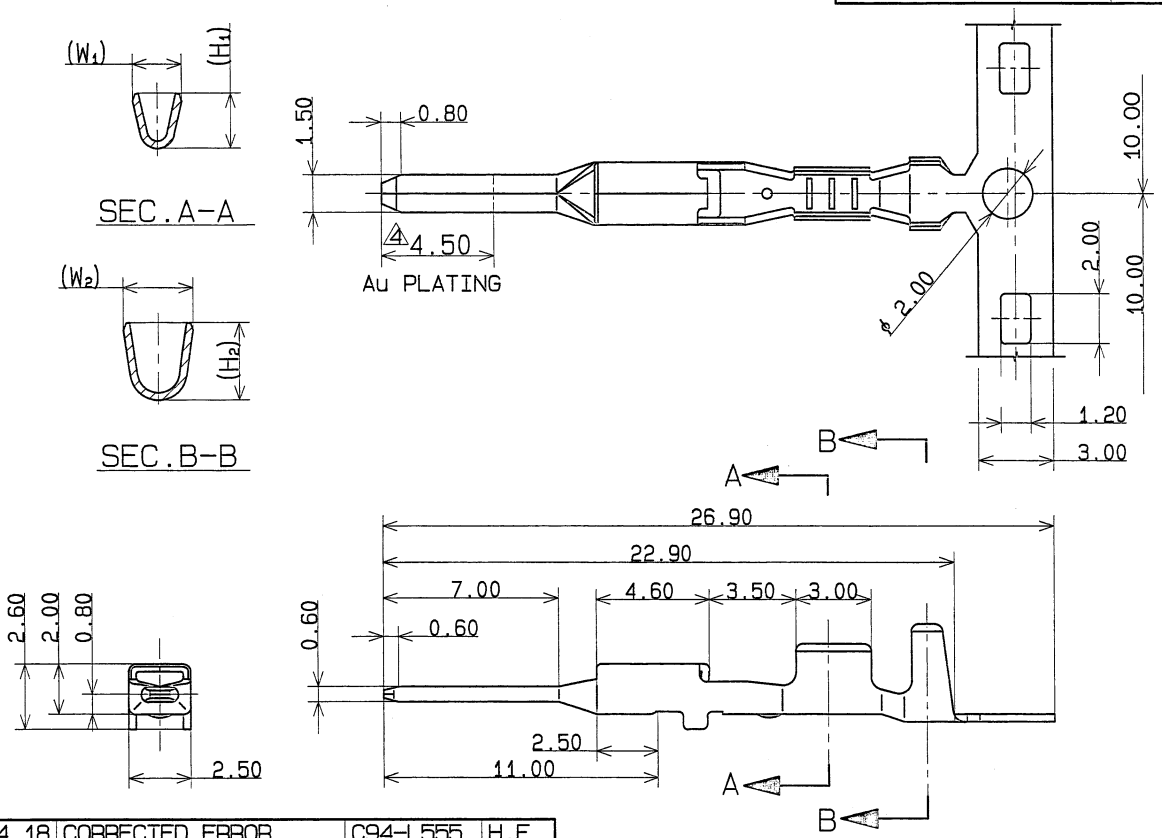

注記

1) 嵌合相手品番 : 7116-1300 ETC.
2) 適用ハウジング品番 : 7122-7960 ETC.
1 3) ( ) 内品番は, エアバッグ回路及び特別管理回路を使用する時に適用すること.

3 NOTES

1) MATING PART NO. : 7116-1300 ETC.
2) APPLICABLE HOUSING PART NO.: 7122-7960 ETC.
3) ( ) PART NO. TO BE USED AIR-BAG SYSTEM AND ADMINISTRATION SYSTEM.

LET	DATE	REVISION RECORD	NO.	CHKD
5	94.04.18	CORRECTED ERROR	C94-L555	H.F
4	93.10.19	ADDED PART NO. ETC.	C93-P164	K.S
3	89.07.12	CHANGED COMPOSITION	C89-7104	H.I
2	89.05.17	CORRECTED ERROR	C89-6820	T.N
1	88.12.08	ADDED PART NO., NOTE	8MC-1540	T.N
	87.11.16	NEW	7MC-0774	K.A

ISSUE MARK

GENERAL TOLERANCE

	10MAX	50MAX	100MAX	250MAX	2500VR	ANGLE	ECCENT
A	±0.15	±0.2	±0.3	±0.5	±0.75	±30'	0.1
B	±0.2	±0.3	±0.55	±0.95	±1.4	±30'	0.1
C	±0.3	±0.5	±0.8	±1.4	±2	±30'	0.15

SPECIFIED

MASS g

CUSTOMER

CUSTOMER PART NO. | CUSTOMER DWG NO.

OFFICE | TRIAL PART NO.

VENDOR

VENDOR NO.

DWG TYPE	DWG SOURCE	DWG DATE	UNIT	SCL	ANGLE
R	NEW	87.11.16	mm	5/1	3

APPROVED	CHECKED	CHECKED	DESIGN	DRAWN
			K.ABE	SAMUKAWA
			87.11.16	94.04.18

MATL. SPEC. SEE TABLE

TREAT. & FIN.

NAME C-TYPE TERMINAL (M)

PART NO. CH.CODE 7114-1300 ETC.

DWG NO. 7114-1300: R

YAZAKI CORPORATION