| NO. | YAZAKI PART NO. |
|---|---|
| ① | 7009-1837 |
| △2,△4 ② | ~~7009-2147~~ |
| △3 ③ | 7009-2694 |

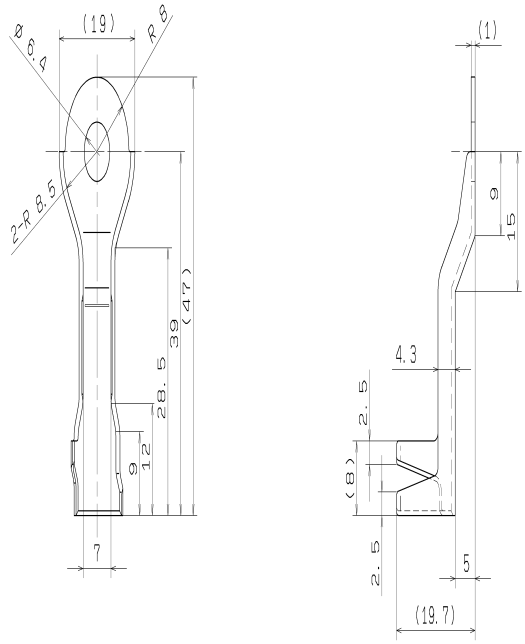


注記

1 使用可能電線

品種:サイズ

CAVUS, CAVS:0.3~1.25

AVSS:2

AVS:0.3~5

AVX, AEX:0.5~5(除く 1構成)

2 適用電線

本数 5本以上 20本以下

総計導断面積(導体部)

△1 5mm²以上 20mm²以下

△2,△3,△4 3 7009-2694は8角形の穴を除き,7009-1837と同形状である。

△4 4 8角形の穴の隅角はR0.3(MAX)とする。

△2 NOTES

1. WIRE SIZE

KIND:SIZE

CAVUS, CAVS:0.3~1.25

AVSS:2

AVS:0.3~5

AVX, AEX:0.5~5(1 COMPOSITION EXCLUDED)

2. APPLICABLE WIRE

NO. OF WIRES 5MIN. 20MAX.

TOTAL WIRE CROSS-SECTION

AREA(CONDUCTIVE PART)

5mm² MIN. 20mm² MAX.

△3,△4 3. 7009-2694 IS THE SAME AS 7009-1837

EXCEPT FOR THE OCTAGONAL HOLE.

△4 4. MAX ALLOWABLE CONRNER RADIUS R0.3.

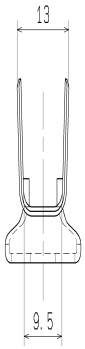


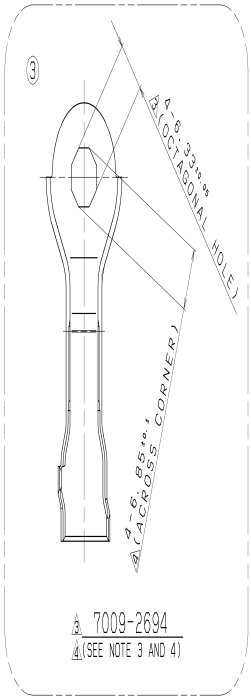


△3 7009-2694
△4(SEE NOTE 3 AND 4)

ISSUE MARK

| | | | | |
|---|---|---|---|---|
| △4 | 08.06.02 | ADDED DIMENSION & NOTE.ETC. | C08-1024 | T.M |
| △3 | 08.05.13 | ADDED PART NO.,CHANGED NOTE. | C08-1018 | T.M |
| △2 | 04.06.01 | ADDED PART NO.,etc. | C04-1132 | T.M |
| △1 | 02.07.11 | CHANGED NOTE | C02-1178 | N.N |
| | 96.10.08 | N E W | C96-0653 | 土屋 |
| LET | DATE | REVISION RECORD | NO. | CHKD |

GENERAL TOLERANCE

| | 10MAX | 50MAX | 100MAX | 250MAX | 250OVR | ANGLE | ECCENT |
|---|---|---|---|---|---|---|---|
| A | ±0.15 | ±0.2 | ±0.3 | ±0.5 | ±0.75 | ±30' | 0.1 |
| B | ±0.2 | ±0.3 | ±0.55 | ±0.95 | ±1.4 | ±30' | 0.1 |
| C | ±0.3 | ±0.5 | ±0.8 | ±1.4 | ±2 | ±30' | 0.15 |

SPECIFIED

MASS △2 APPROX.6.8g

| CUSTOMER | | MATL. SPEC. △2 銅(COPPER) t=1 | TREAT. & FIN. |
|---|---|---|---|
| CUSTOMER PART NO. | CUSTOMER DWG NO. | | |
| OFFICE | TRIAL PART NO. | NAME TERMINAL | |
| VENDOR | | | |
| VENDOR NO. | | | |

| DWG TYPE | DWG SOURCE | DWG DATE | UNIT | SCL | ANGLE |
|---|---|---|---|---|---|
| R | N E W | 96.10.08 | mm | 2:1 | 3 |

| APPROVED | CHECKED | CHECKED | DESIGN | DRAWN |
|---|---|---|---|---|
| K.SHIGEHISA | T.TEZUNA | S.KOMATSU | 山形 | T.MATSUDAIRA |
| | | | 90.12.21 | 08.06.02 |

PART NO. / CH. CODE: 7009-1837 ETC.

DWG NO.: 7009-1837:R

SET DWG NO.

YAZAKI CORPORATION

C-080602 191138