	10MAX	50MAX	100MAX	250MAX	2500VR	ANGLE	ECCENT
GENERAL TOLERANCE	±0.5	±0.8	±1.5	±2.5	±3	±5°	0.3

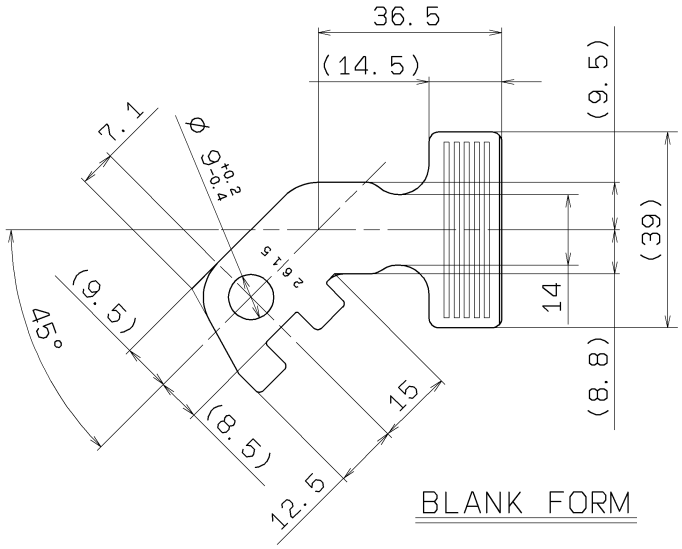

BLANK FORM

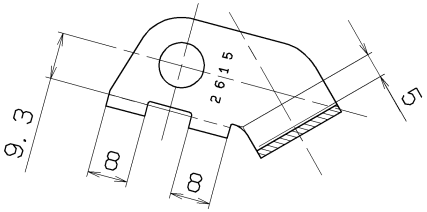

SEC. A-A

注記

1. 適用電線サイズ：AV(EB)30+5
AV(EB)20+5

NOTES

1. APPLICABLE WIRE SIZE:AV(EB)30+5
AV(EB)20+5

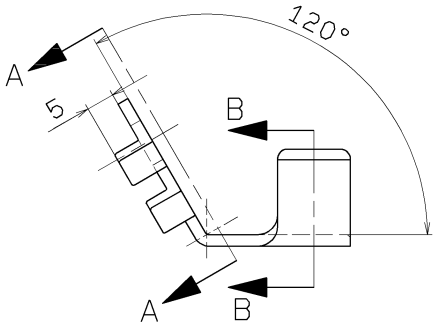

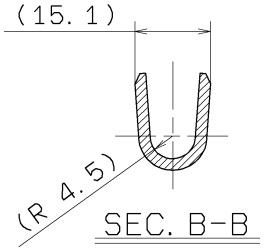

SEC. B-B

ISSUE MARK

LET	DATE	REVISION RECORD	NO.	CHKD
	04.09.22	N E W	C04-0200	S.U

GENERAL TOLERANCE

	10MAX	50MAX	100MAX	250MAX	2500VR	ANGLE	ECCENT
A	±0.15	±0.2	±0.3	±0.5	±0.75	±30'	0.1
B	±0.2	±0.3	±0.55	±0.95	±1.4	±30'	0.1
C	±0.3	±0.5	±0.8	±1.4	±2	±30'	0.15

SPECIFIED SEE TABLE

MASS APPROX. 18 g

CUSTOMER

CUSTOMER PART NO. | CUSTOMER DWG NO.

OFFICE | TRIAL PART NO.

VENDOR

VENDOR NO.

DWG TYPE	DWG SOURCE	DWG DATE	UNIT	SCL	ANGLE
R	N E W	04.09.22	mm	1:1	3

APPROVED	CHECKED	CHECKED	DESIGN	DRAWN
木村	鈴木	赤松	藤井	S. UEMATSU
			02.02.21	T. MATSUHISA 04.09.22

MATL. SPEC. C2801 (t=2.3) | TREAT. & FIN. TIN PLATE

NAME TERMINAL

PART NO. / CH. CODE 7003-2615-02

DWG NO. 7003-2615-02:R | SET DWG NO.

YAZAKI CORPORATION

C-040927 150411