NRGC-MBTCP

NRG controller with Modbus TCP Communication

Main features

- **Communication interface.** The NRG controller bridges the field level devices to the control level to allow exchange of data in real-time with the NRG solid state relays.
- **Reduced maintenance costs and downtime.** Use of real-time data for prevention of machine stoppages during operation.
- **Good quality products and low scrap rates.** Real-time monitoring allows timely decisions for better machine and process management.
- **Reduced efforts in troubleshooting.** A number of faults can be distinguished to facilitate and reduce troubleshooting time.
- **Fast installation and set-up.** Control, monitoring and diagnostics all possible via the communication system.
- **Compact dimensions.** One controller with a product width of 35 mm can handle up to 32 switched poles of the RG..CM..N.

Description

The **NRGC-MBTCP** is the NRG controller in the NRG BUS chain.

The **NRGC-MBTCP** interfaces directly with the main controller of the system through Modbus TCP communication.

The **NRGC-MBTCP** is mainly a facilitator of the communication between the main controller and each individual RG..N solid state relay in the system. The **NRGC-MBTCP** also performs internal operations to setup and maintain the internal bus.

The **NRGC-MBTCP** needs to be supplied with 24 VDC. LEDs on the front facade give a visual indication of the status of the **NRGC-MBTCP**, of any ongoing communication with the main controller and the RG..Ns on the BUS chain and of any alarm condition related specifically to the **NRGC-MBTCP**.

Specifications are noted at 25°C unless otherwise specified.

Applications

Any heating application where reliable and precise maintenance of temperatures is crucial to the quality of the end product. Typical applications include plastic machinery such as injection machines, extrusion machines and PET blow moulding machines, packaging machinery, sterilisation machinery, drying tunnels and semiconductor manufacturing equipment.

Main function

- Communication interface: Modbus TCP
- Connects up to 32 **RG..CM..Ns**
- Supply voltage 24 VDC +/-20%

The NRG system

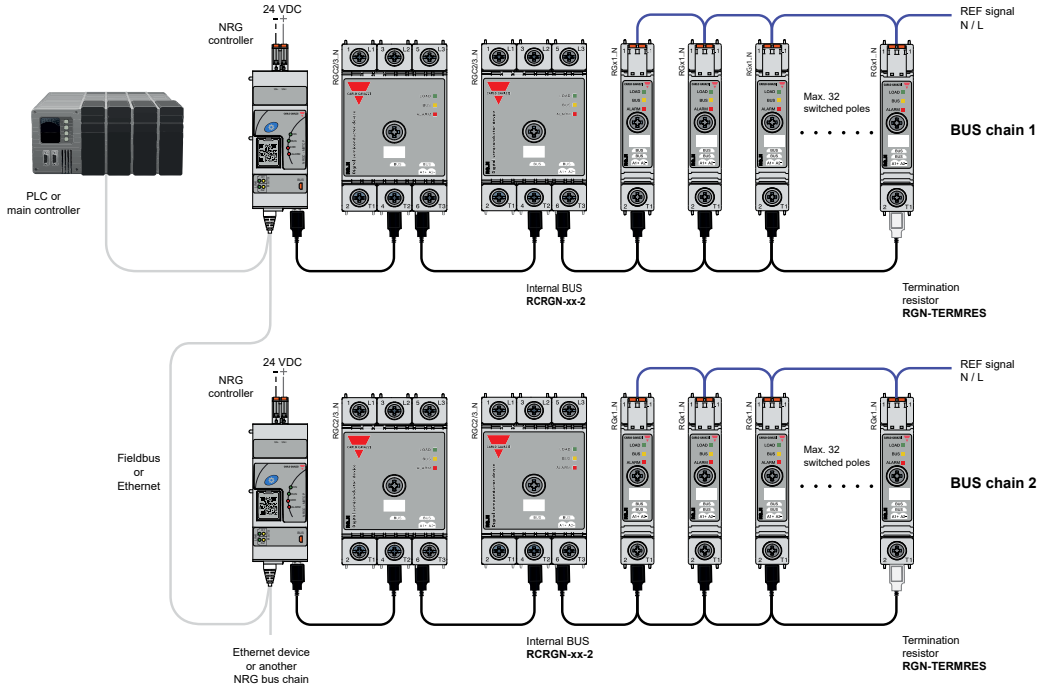

System Overview

The NRG is a system consisting of one or more BUS chains that enable communication between the field devices (such as the solid state relays) and the control devices (such as the machine controller or PLC).

Each NRG BUS chain consists of the following 3 components:

1. the NRG controller (NRGC..)
2. the NRG solid state relay(s) (RG..N)
3. the NRG internal BUS cables (RCRGN-XXX-2)

The NRG controller is the interface to the machine controller and determines the communication protocol used. It is not possible to operate the NRG system without the NRG controller.

The NRG controllers available are:

- **NRGC** - NRG controller with a Modbus RTU interface over RS485.
- **NRGC-PN** - NRG controller with a PROFINET communication interface. The NRGC-PN is identified by a unique MAC address which is printed on the facade of the product. The GSD file can be downloaded from www.gavazziautomation.com
- **NRGC-EIP** - NRG controller with an EtherNet/IP communication interface. The IP address is provided automatically via a BOOTP server. The EDS file can be downloaded from www.gavazziautomation.com
- **NRGC-ECAT** - NRG controller with an EtherCAT communication interface. The ESI file can be downloaded from www.gavazziautomation.com
- **NRGC-MBTCP** - NRG controller with a Modbus TCP communication interface.

The NRG solid state relay is the switching and monitoring component in the NRG system. Each RG..N integrates a communication interface to exchange data with the machine controller (or PLC). The available RG..Ns that can be used in an NRG system are:

- **RG..D..N**

  The RG..D..N are solid state relays for use in an NRG system having the communication interface only for real time monitoring. Control of the RG..N is done via a DC control voltage. It is possible to have max. 48 x RG..D..Ns in one NRG BUS chain.

System Overview (continued)

- **RG..CM..N**

  The RG..CM..N are solid state relays for use in an NRG system having a communication interface for control of the RG..N through the BUS and for real-time monitoring. Different variants of the RG..CM..N can be mixed on the buschain with a maximum limit of 32 switched poles. The variants of the RG..CM..N are:
  - RGx1A..CM..N – 1-pole solid state relay with zero cross switching.
  - RGx1P..CM..N – 1-pole solid state relay with proportional switching.
  - RGC2P..CM..N – 2-pole solid state contactors with proportional switching.
  - RGC3P..CM..N – 3-pole solid state contactor with proportional switching.

For a review of the features and compatibilities across all variants refer to the table below:

Feature		RGx1A..D..N	RGx1A..CM..N	RGx1P..CM..N	RGC2P..N	RGC3P..N
COMMUNICATION PROTOCOLS	Modbus RTU	●	●	●	●	●
	Modbus TCP	-	●	●	●	●
	PROFINET	-	●	●	●	●
	EtherNet/IP	-	●	●	●	●
	EtherCAT	-	●	●	●	●
Max. number of switched poles on BUS		48	32	32	32	32
External control		●	●	-	●	●
Control over BUS		-	●	●	●	●
SWITCHING MODES	ON / OFF	●	●	●	●	●
	Burst	●	●	●	●	●
	Distributed full cycle	●	●	●	●	●
	Advanced full cycle	●	●	●	●	●
	Phase angle	-	-	●	-	●
	Soft start with time *	-	-	●	-	●
	Soft start with current limit *	-	-	●	-	●
	Voltage compensation	-	-	●	●	●
	True power compensation *	-	-	-	●	●
Monitoring of system parameters		●	●	●	●	●
SSR diagnostics		●	●	●	●	●
Load diagnostics		●	●	●	●	●
Over-temperature protection		●	●	●	●	●

* feature currently unavailable for RGC2/3P..N. To be released soon..

Notes:

- **RG..D..N** and **RG..CM..N** devices cannot be mixed in the same bus chain.
- The **NRG internal BUS cables** are proprietary cables to daisychain the RG..Ns on the NRG bus chain and to connect the NRG controller to the first RG..N.
- The **internal BUS terminator** is provided in the same package with the NRG controller and shall be plugged into the last RG..N in the NRG bus chain.

List of contents

NRGC-MBTCP
References 5
Structure 6
General data 7
Dimensions 7
Power supply specifications 7
Auto-addressing 8
Communications 9
Internal bus 9
Compatibility and conformance 10
Environmental specifications 11
LED indicators 11
Alarm management 12
Connection diagram 12
Mounting 13
Connection specifications 14

RCRGN 15

References

Order code

NRGC-MBTCP

Carlo Gavazzi compatible components

Description	Component code	Notes
Solid state relays	RG..CM..N	NRG solid state relays • **RGx1..CM..N - 1**-pole SSR with control and real-time monitoring via BUS. • **RGC2/3P..N** - 2/3 pole SSR with control and real-time monitoring via BUS (NRGC-MBTCP requires FW V2.0.0 or later for compatibility with RGC2/3P..N)
NRG Internal BUS cables	RCRGN-010-2	10cm cable terminated at both ends with a microUSB connector. Packed x4 pcs.
	RCRGN-025-2	25cm cable terminated at both ends with a microUSB connector. Packed x1 pc.
	RCRGN-075-2	75cm cable terminated at both ends with a microUSB connector. Packed x1 pc.
	RCRGN-150-2	150cm cable terminated at both ends with a microUSB connector. Packed x1 pc.
	RCRGN-350-2	350cm cable terminated at both ends with a microUSB connector. Packed x1 pc.
	RCRGN-500-2	500cm cable terminated at both ends with a microUSB connector. Packed x1 pc.

Further reading

Information	Where to find it	
User manual NRGC Modbus TCP	https://www.gavazziautomation.com/fileadmin/images/PIM/MANUALS/ENG/SSR_UM_NRG_MBTCP.pdf	
Datasheet RGx1..CM..N (1-pole SSR with control and real-time monitoring via BUS)	http://gavazziautomation.com/images/PIM/DATASHEET/ENG/SSR_RG_CM_N.pdf	
Datasheet RGC2/3P..N (2/3-pole SSR with control and real-time monitoring via bus)	https://www.gavazziautomation.com/fileadmin/images/PIM/DATASHEET/ENG/SSR_RGC_2_3_N.pdf	

Structure

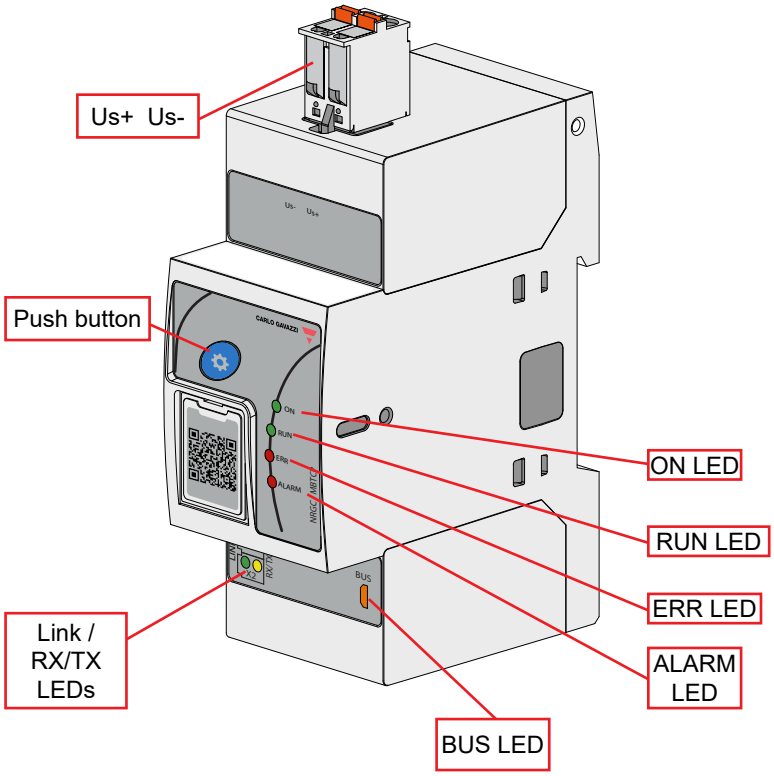

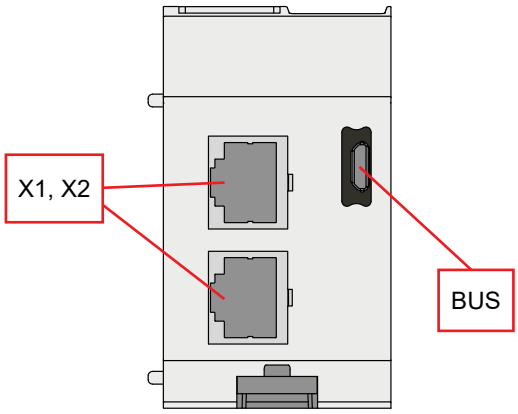

Bottom view

Element	Component	Function
Us+ Us-	Supply connection	2 position spring plug – Us-, Us+ connection for powering the NRGC-MBTCP
Push button	Communications check & Autoaddressing button	Enables and disables a Communications Check function of the BUS chain (link between NRGC-MBTCP and RG..Ns) by pressing front button between 2 to 5 seconds Enables auto addressing of RG..Ns when pressed for 3 seconds during power up. Check 'Autoaddressing' section for more info.
ON LED	ON indicator	Indicates presence of supply voltage on NRGC-MBTCP
BUS LED	BUS indicator	Indicates ongoing communication with RG..Ns
RUN LED	Modbus TCP status	Status of TCP connection
ERR LED	Modbus TCP error	Indicates communication and system errors
ALARM LED	ALARM indicator	Indicates presence of an alarm condition
Link / RX/TX LEDs	Link/Activity indicators	Indicates the status of the physical Ethernet connection
X1,X2	Ethernet ports	2x RJ45 plugs for Modbus TCP communication
BUS	Micro-USB port – internal BUS	RCRGN cable connection for the internal BUS communications line

Features

General data

Material	Noryl (UL94 V0), RAL7035
Mounting	DIN rail
Dimensions	2-DIN
Touch protection	IP20, IP00 with door flap on front facade open
Weight	142 g
Compatibility	RGC..CM..N solid state contactors (RG end-devices) RGS..CM..N solid state relays (RG end-devices)

Dimensions

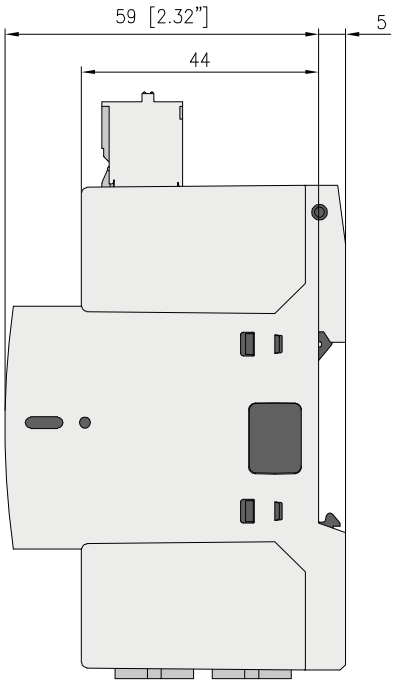

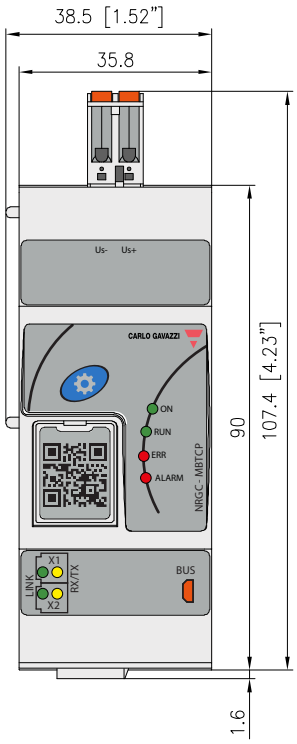

All dimensions in mm.
Tolerances +/- 0.5 mm.

Performance

Power supply specifications

Supply port rating, Us	24 VDC
Supply voltage range, Us	19.2 – 32 VDC*
Reverse polarity protection	Yes
Consumption	< 12 W
LED Indication, Supply ON	Green LED
Power on	2 s

* to be supplied by class 2 power source according to UL1310

Auto-addressing

The RG..Ns on the bus chain are automatically addressed upon the first start-up of the system. The RG..Ns are addressed based on their position on the bus chain.

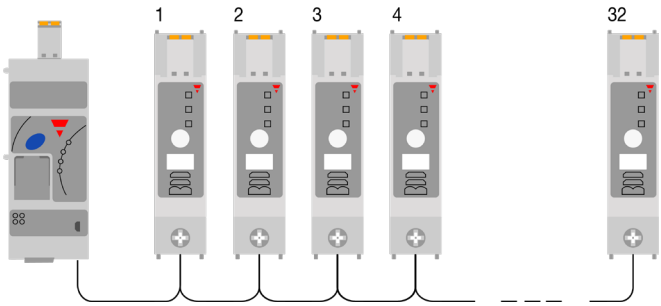

In case of an RG..N replacement, or any changes to the NRG bus chain, the RG..Ns have to be re-addressed. Follow the procedure below to re-address the RG..Ns on the NRG bus chain manually. Alternatively, auto-addressing can be done via communication. (check NRG Modbus TCP User Manual for further information)

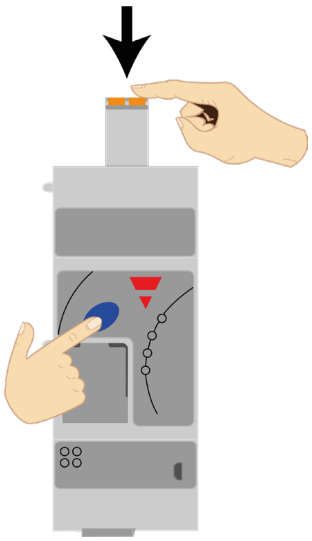

Fig. 1 *Hold the blue button while powering up the NRGC-MBTCP*

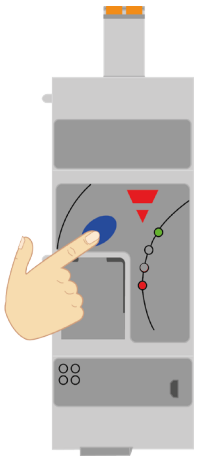

Fig. 2 *Release when Alarm LED turns ON indicating that autoaddressing is complete*

Communication

Communication protocol to Main Controller	Modbus TCP
Default communication settings	Default IP address 192.168.1.[last byte of the MAC address] If for example the MAC address is 68-49-B2-00-00-05, the default IP address configured is 192.168.1.5 As a reference, the default IP address in full is listed on the side label of the NRGC-MBTCP Default subnet netmask 255.255.255.0 Default gateway 192.168.1.25 For more information please refer to NRG Modbus TCP user manual
Communication interface	The ethernet ports are 100 Mbit, full duplex operation ports and should be connected to another Modbus TCP device with a standard ethernet cable via the standard RJ45 connector (maximum length 100 m)
LED indication - RX/TX	Yellow, Flashing - NRGC-MBTCP is sending/receiving Ethernet frames
LED indication - Link	Green, ON - Device is linked to Ethernet

Internal Bus

Max. number of RG..Ns connected to NRGC-MBTCP	32x switched poles of the RG..CM..N solid state relays
Connection to RG..Ns	RCRGN-xx 5-way cable terminated with micro-USB connection
BUS termination	RGN-TERMRES (1x pc. provided with 1x NRGC-MBTCP) to be plugged on the last RG..N on the BUS chain to terminate the internal BUS
LED indication - BUS	Yellow, ON indicating ongoing communication with the RG end-devices

Compatibility and Conformance

Approvals	CE c UL us LISTED EAC
Standards compliance	LVD: EN 60947-5-1 EMCD: EN 60947-5-1 UL: UL508 (E172877), NMFT cUL: C22.2 No. 14 (E172877), NMFT7

Electromagnetic compatibility (EMC) - Immunity	
Electrostatic discharge (ESD)	EN/IEC 61000-4-2 8 kV air discharge, 4 kV contact (PC1)
Radiated radio frequency	EN/IEC 61000-4-3 10 V/m, from 80 MHz to 1 GHz (PC1) 10 V/m, from 1.4 to 2 GHz (PC1) 3 V/m, from 2 to 2.7 GHz (PC1)
Electrical fast transient (burst)	EN/IEC 61000-4-4 Input: 1 kV, 5 kHz & 100 kHz (PC1) Internal bus: 1 kV, 5 kHz & 100 kHz (PC1) Ethernet ports: 1 kV, 5 kHz & 100 kHz (PC1) 2 kV, 5 kHz & 100 kHz (PC2)
Conducted radio frequency	EN/IEC 61000-4-6 10 V/m, from 0.15 to 80 MHz (PC1)
Electrical surge	EN/IEC 61000-4-5 DC Output / Input, line to line: 500 V (PC2) DC Output / Input, line to earth: 500 V (PC2) Signal, line to earth 1 kV (PC2)[1]
Voltage dips and interruptions	EN/IEC 61000-4-11 0% @ 5000 ms (PC2) 40% @ 200 ms (PC2) 60% @ 10, 30, 100, 300, 1000 ms (PC2)
Voltage dips and interruptions on input lines	EN/IEC 61000-4-29 0% @ 1, 3, 10, 30, 100, 300, 1000 ms (PC2) 30% @ 10, 30, 100, 300, 1000 ms (PC2) 70% @ 10, 30, 100, 300, 1000 ms (PC2) 80% @ 10, 30, 100, 300, 1000 ms, 3 s, 10 s (PC2) 120% @ 10, 30, 100, 300, 1000 ms, 3 s, 10 s (PC2)

1. Not applicable to shielded cables <10m. Additional suppression on data lines may be required if shielded cables are not used.

Electromagnetic compatibility (EMC) - Emissions	
Radio interference field emission (radiated)	EN/IEC 55011 Class A: from 30 to 1000 MHz
Radio interference voltage emissions (conducted)	EN/IEC 55011 Class B: from 0.15 to 30 MHz

Environmental specifications

Operating temperature	-20 to +65 °C (-4 to +149 °F)
Storage temperature	-20 to +65 °C (-4 to +149 °F)
Relative humidity	95% non-condensing @ 40°C
Pollution degree	2
Installation altitude	0 - 2000m
EU RoHS compliant	Yes
China RoHS	

LED indicators

ON	Green	ON:	Us is present at terminals Us+, Us-
		OFF:	Us is not present at terminals Us+, Us-
LINK	Green	ON:	Device is linked to Ethernet
		OFF	Device has no link to Ethernet
RX/TX	Yellow	OFF:	No frames are being sent/received
		Flashing:	NRGC-MBTCP is sending/receiving Ethernet frames
BUS	Yellow	ON:	During transmission of messages from NRGC-MBTCP to RG..Ns
		OFF:	Idle bus between the NRGC-MBTCP and RG..Ns and when NRGC-MBTCP is receiving data from RG..Ns
ALARM	Red	ON:	Flashing when alarm condition on NRGC-MBTCP is present. Refer to Alarm management section
		OFF:	No alarm condition
RUN	Green	ON:	**Connected: OMB task has communication.** At least one TCP connection is established
		Flashing (1Hz):	**Ready, not configured yet:** OMB task is ready and not yet configured
		Flashing (5Hz):	**Waiting for communication:** OMB task is configured
		OFF:	**Not ready:** OMB task is not ready
ERR	Red	ON:	Communication error active
		Flashing:	System error
		OFF:	No communication error

Alarm management

Alarm condition present	• ALARM LED ON with a specific flashing rate • Alarms are also available as process data via the Modbus TCP communication interface. Refer to NRG Modbus TCP User Manual for further information	
Alarm types	**No. of flashes**	**Description of fault**
	2	Errors in the configurations of the internal NRG bus chain including: • Number of RG..Ns on bus chain is > 32 (Device Limit Error) • More than one RG..N on the bus chain have the same address (Device conflict error) • One of the RG..Ns does not have an address. This may occur when a new RG..N is introduced to the bus chain (Device Unconfigured Error) • The internal Device ID of one of the RG..Ns on the bus chain does not correspond to its position on the bus (Device Position Error)
	4	Supply Error: Supply to NRGC-MBTCP is outside of the specified range
	8	Communication Error (BUS): An error in the communication link (internal BUS) between the NRGC-MBTCP and RG..Ns
	9	Internal Error: Detection of internal issues with the NRGC-MBTCP
	10	Termination (BUS) Error: Internal BUS chain not terminated
Flashing rate	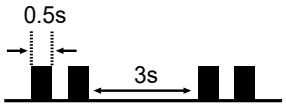	

Connection diagram

The NRG bus chain can be configured in a Modbus TCP network via a line, ring, star or tree topologies via the ethernet ports on the NRGC-MBTCP.

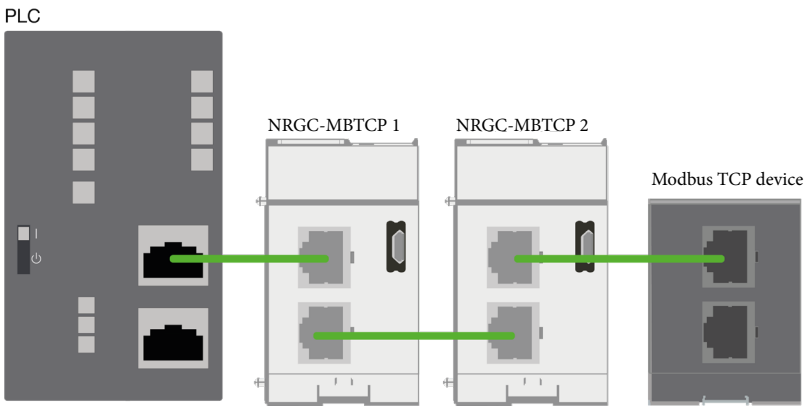

Fig. 3 *Example of a line configuration of the NRGC-MBTCP with other Modbus TCP devices and controller*

Mounting

Mounting on DIN rail

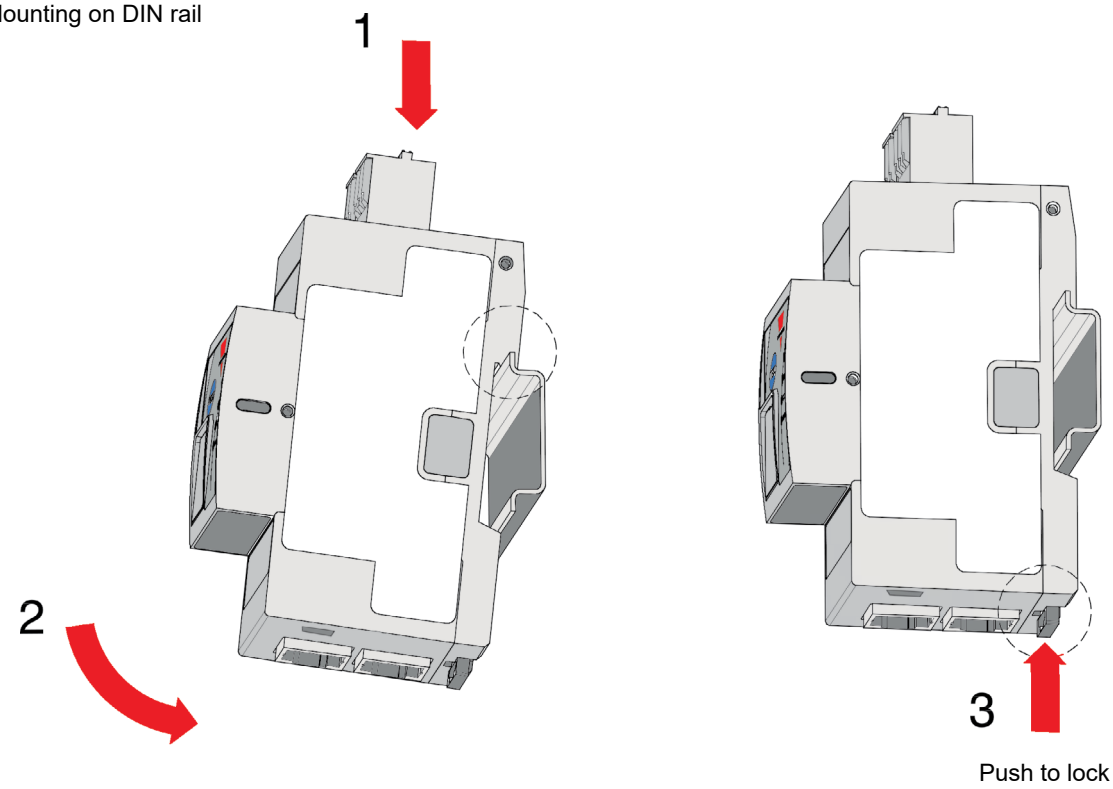

Dismounting from DIN rail

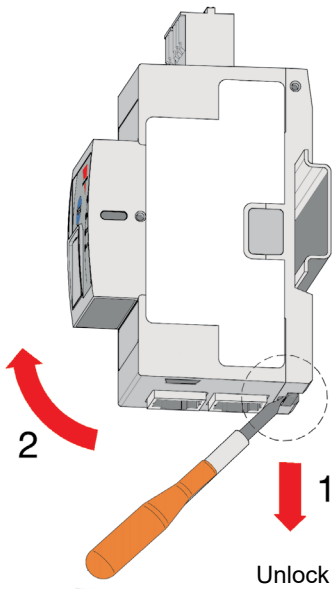

Connection specifications

Power connection	
Terminal	Supply: Us+, Us-
	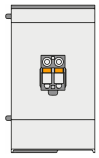 Top view
Conductors	Use 60/75°C copper (Cu) conductors
Stripping length	12 - 13 mm
Connection type	2-pole spring plug, pitch 5.08 mm
Rigid (solid & stranded) UL/CSA rated data	0.2 – 2.5 mm², 26 – 12 AWG
Flexible with end sleeve	0.25 – 2.5 mm²
Flexible without end sleeve	0.25 – 2.5 mm²
Flexible with end sleeve using TWIN ferrules	0.5 – 1.0 mm²

Communication - connection	
Terminal	X1, X2: RJ45 (x2) BUS: RCRGN-xxx-2
	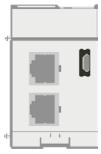 Bottom view
Modbus TCP connection	RJ45 shielded plugs
Cable for Modbus TCP	Not provided..
Max. length of Ethernet cable	100 mtrs (between Modbus TCP devices)
Cable for Internal Bus	RCRGN-xxx-2: 5-way USB micro connection - +24 supply line for RG..Ns - GND - RS485A - RS485B - Autoconfig / Auto addressing line

RCRGN..

NRG internal BUS cable

Main features

- Cables available at various lengths for the internal BUS of the NRG system
- Cables terminated at both ends with a microUSB plug
- Connects the NRG controller to the RG..N solid state relay and respective RG..N solid state relays

Description

The **RCRGN** cables are proprietary cables that must be used with the NRG system for the internal BUS. These cables are 5-way cables carrying the communication, supply and autoconfiguration / auto-addressing lines. By means of autoconfiguration / auto-addressing, the RG..Ns are assigned a unique ID based on the physical location and on the internal BUS.

Carlo Gavazzi compatible components

Description	Component code	Notes
NRG Controller	NRGC..	NRG controllers: Modbus, Modbus TCP, PROFINET, EtherNet/IP, EtherCAT 1x **RGN-TERMRES** is included in the NRGC.. packaging. The RGN-TERMRES is to be mounted on the last RG..N on the bus chain.
Solid state relays	RG..N	NRG solid state relays

Order code

RCRGN - ☐ - 2

Enter the code entering the corresponding option instead of ☐

Code	Option	Description	Notes
RCRGN	**-**	Cables suitable for the NRG system	
☐	**010**	10 cm cable length	packed x 4 pcs.
	025	25 cm cable length	packed x 1 pc.
	075	75 cm cable length	packed x 1 pc.
	150	150 cm cable length	packed x 1 pc.
	350	350 cm cable length	packed x 1 pc.
	500	500 cm cable length	packed x 1 pc.
2	**-**	Terminated at the both ends with a microUSB connector	

COPYRIGHT ©2026
Content subject to change.
Download the PDF: http://gavazziautomation.com