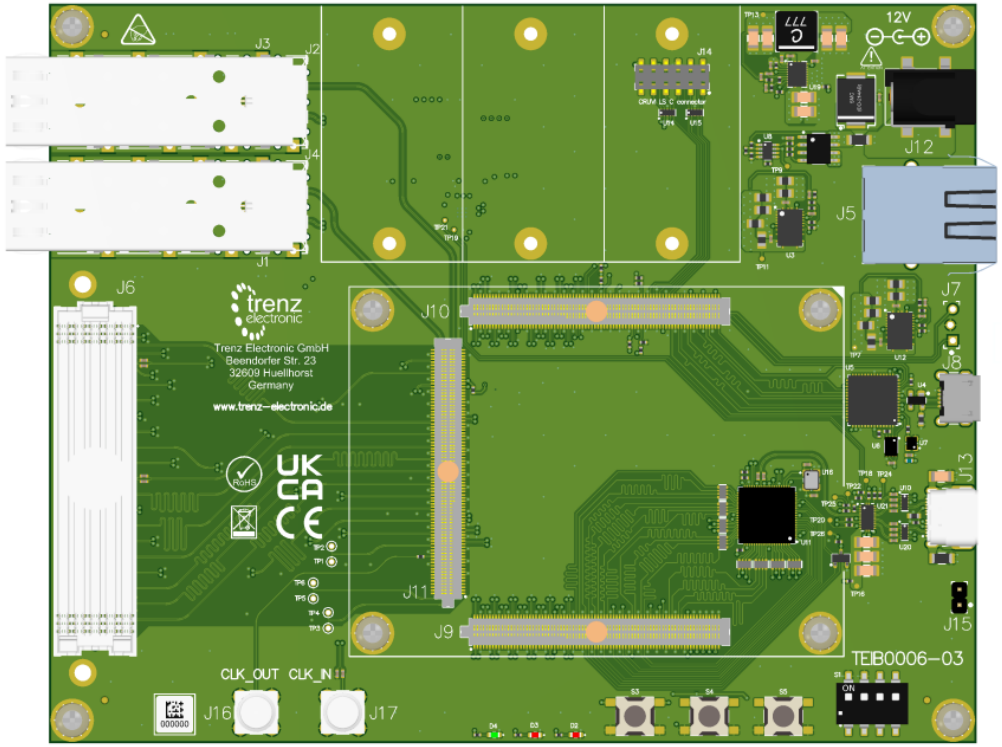

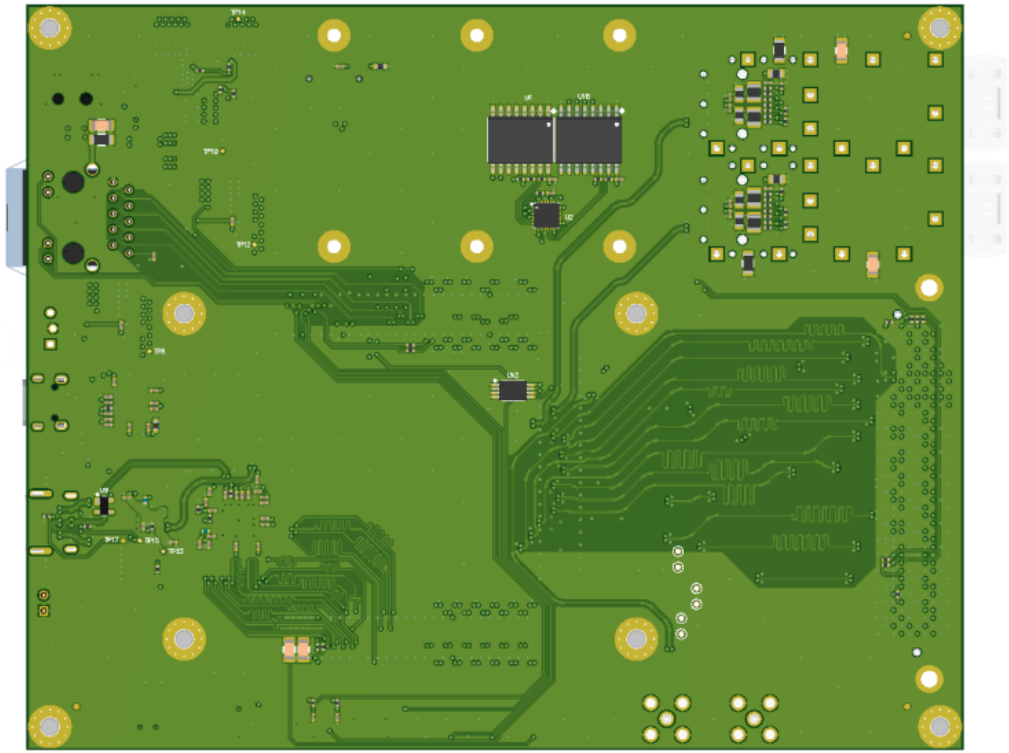

Regarding the usage of our schematics and alike documentation for Trenz baseboard TEIB0006 .
Baseboard is Open Source Hardware and therefore free to use, adapt and can be modified to suit your needs as described in the "The MIT License".
Permission is hereby granted, free of charge, to any person obtaining a copy of this hardware and associated documentation files (the "Product"), to deal in the Product without restriction, including without limitation the rights to use, copy, modify, merge, publish, distribute, sublicense, and/or sell copies of the Product, and to permit persons to whom the Product is furnished to do so.
Schematics and other handouts serve for informational purposes only!

Drawn by	IG/VG
Checked by	VT
Assembly variant	A
Created by	VT
Modified by	IG
Modified at	2025-02-07

trenz electronic

Title: TEIB0006 – Legal Notices		
A4	Number: TEIB0006 A	Rev. 03
Date: 31.03.2025	Copyright: Trenz Electronic GmbH	Page 1 of 16
Filename: Legal Notices Baseboards.SchDoc		

REV	Description	
-01	Initial revision	VT
-02	1. Remove R60,R61 (pull-up for DEVCLRN,NSTATUS -> set on micromodule) 2. Remove CLKUSR from J2, remove J15 3. Changed 1.8V -> VADJ (connector J2 pins 140,142; U11; R78;R79) 4. Changed 1.8V -> 1.8VIO (U2) 5. Removed Battery holder, added optional 2-pin header for Battery 6. Removed pin headers J7/J14, added optional CRUVI (J14) 7. Changed DCDC (LMZ23605TZ/NOPB -> LTM4638EY#PBF) 8. Full upd LIB	VT (10.2019)
-03	1. DCDC U3, U12 EN6340QI (EOL) regulators have been replaced by MPM3860GQW-Z. 2. U19 LTM4638EY#PBF replaced by MPQ8633BGLE-Z. 3. Diode U10, U14, U15 AOZ8808DI-03 (NRND) are replaced with AOZ8S311UD4-03. 4. FUSE F1 is EOL and replaced. 5. Resistors R21, R24 are changed with 330 Ohms. 6. The USB Type C shield J13 connected to GND in accordance with the USB-C standard. R82 is changed with 0 Ohm. 7. Added USB Switch U21. 8. Added diode U20. 9. Clock generator U16 is replaced with quartz. 10. Replaced power Jack J12 . 11. Added series resistors R83, R84, R86-R90, R94 for impedance matching. 12. Oszillator U7 SiT8008AI-73-XXS-12.000000E is EOL and replaced with SiT8008BI-73-XXS-12.000000E. 13. Added additional capacitors C107, C109 to S3, S4. 14. Added additional capacitors C111 , C112 and resistors R110 , R111 to J2 , J4 . 15. Added additional capacitors C114 , C116 to CRUVI LS J14 . 16. Added additional capacitors C120 , C121. 17. Induktoren L1 - L4 are changed with 4.7 µH. 18. Added capacitor C106 to filter the power supply. 19. Added test points TP7 - TP26. 20. Page "USB30" renamed to "USB30_to_DATA". 21. Added page "USB30_CONN_SWITCH". 22. Track-it™ Traceability Pad is removed (EOL). 23. Added legal notices, power overview and system overview. 24. Updated company address on PCB. 25. Added UKCA logo, ESD protection logo.	IG/VG (02.2025)

trenz electronic	Title: TEIB0006 - Revision Changes		
A4	Number: TEIB0006 A		Rev. 03
Date: 2025-03-05	Copyright: Trenz Electronic GmbH		Page2 of 16
Filename: Revision_Changes.SchDoc			

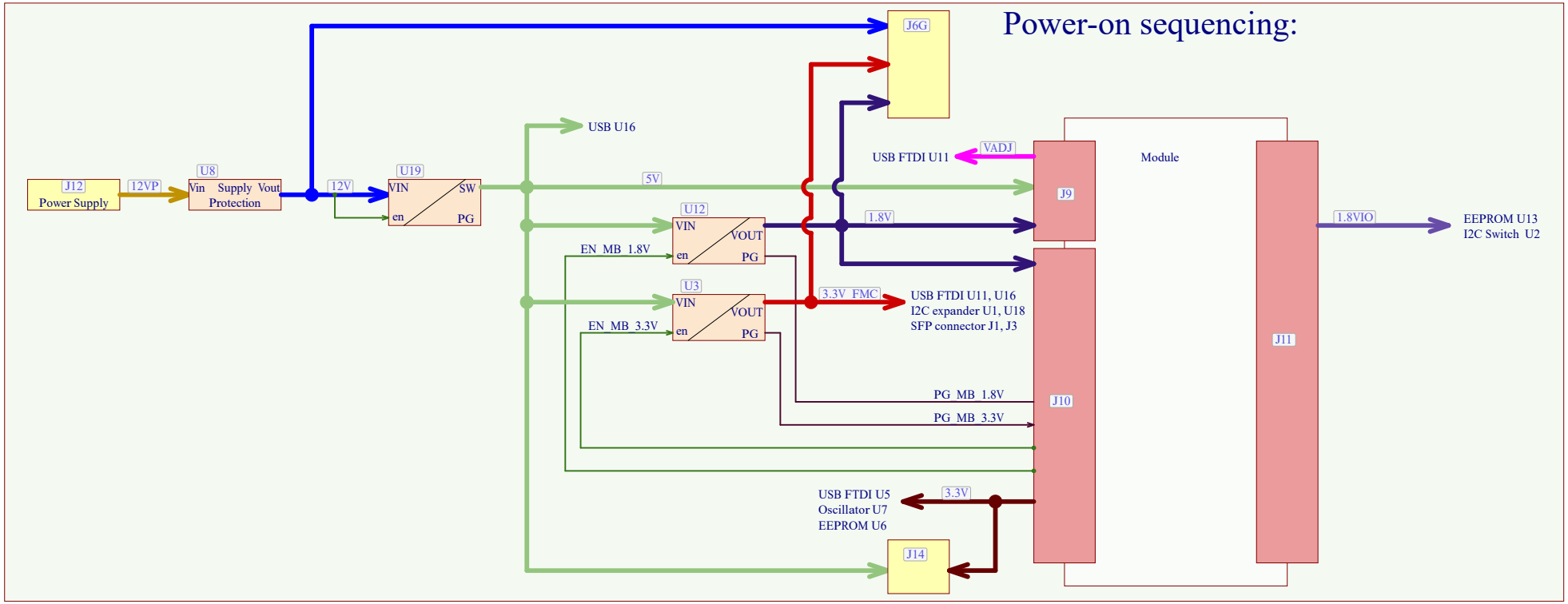

Supported Voltage Ranges:

Power Rail	Direction	Range	Tolerance	Description	Note
12VP	IN	12V	+/-5%	Micromodule Power	J12
12V	IN	12V	+/-5%	Power supply for external use	J6
5V	OUT	5V	+/-3%	Power supply for external use Micromodule Power	J9, J14
3.3V_FMC	IN/OUT	3.3V	+/-3%	Power supply for external use Micromodule Power	J6
3.3V	OUT	3.3V	+/-3%	Power supply for external use	J10, J14
1.8V	OUT	1.8V	+/-3%	Power supply for external use	J9, J10, J6
1.8VIO	OUT	1.8V	+/-3%	Micromodule Power	J11
VADJ	OUT	1.8V	+/-3%	Micromodule Power	J9

Legend:

3.3V — Net name

Power bus

Control signal

B2B Connector

Connector

PL_DCIN / 0.9V — On-Board Power Supply Device

trenz electronic	Title: TEIB0006 – Power Overview		
A4	Number: TEIB0006 A		Rev. 03
Date: 03.12.2025	Copyright: Trenz Electronic GmbH		Page 3 of 16
	Filename: Power_Overview.SchDoc		

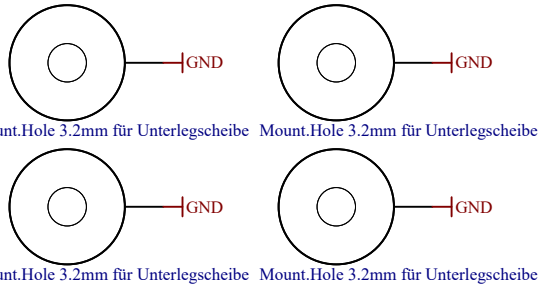

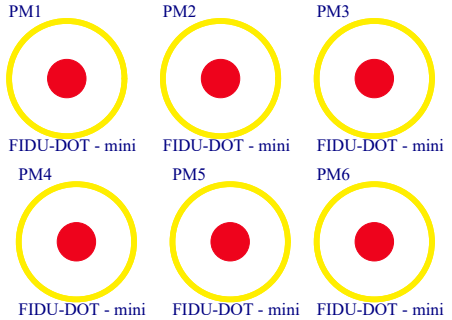

Serial
Serial
Serialnumber 6,3 x 6.3mm

LOGO1
TE Logo PRINT Layer
LOGO PRINT

MECH1
TE Address Overlay
LOGO ADDRESS

WEEE1
WEEE Logo on Top Overlay
WEEE-TOPOVERLAY

RoHS1
RoHS Logo on Top Overlay
RoHS-TOPOVERLAY

CE1
CE Logo on Top Overlay
CE-TOPOVERLAY

UKCA1
UKCA Logo on Top Overlay
UKCA-TOPOVERLAY

System Overview

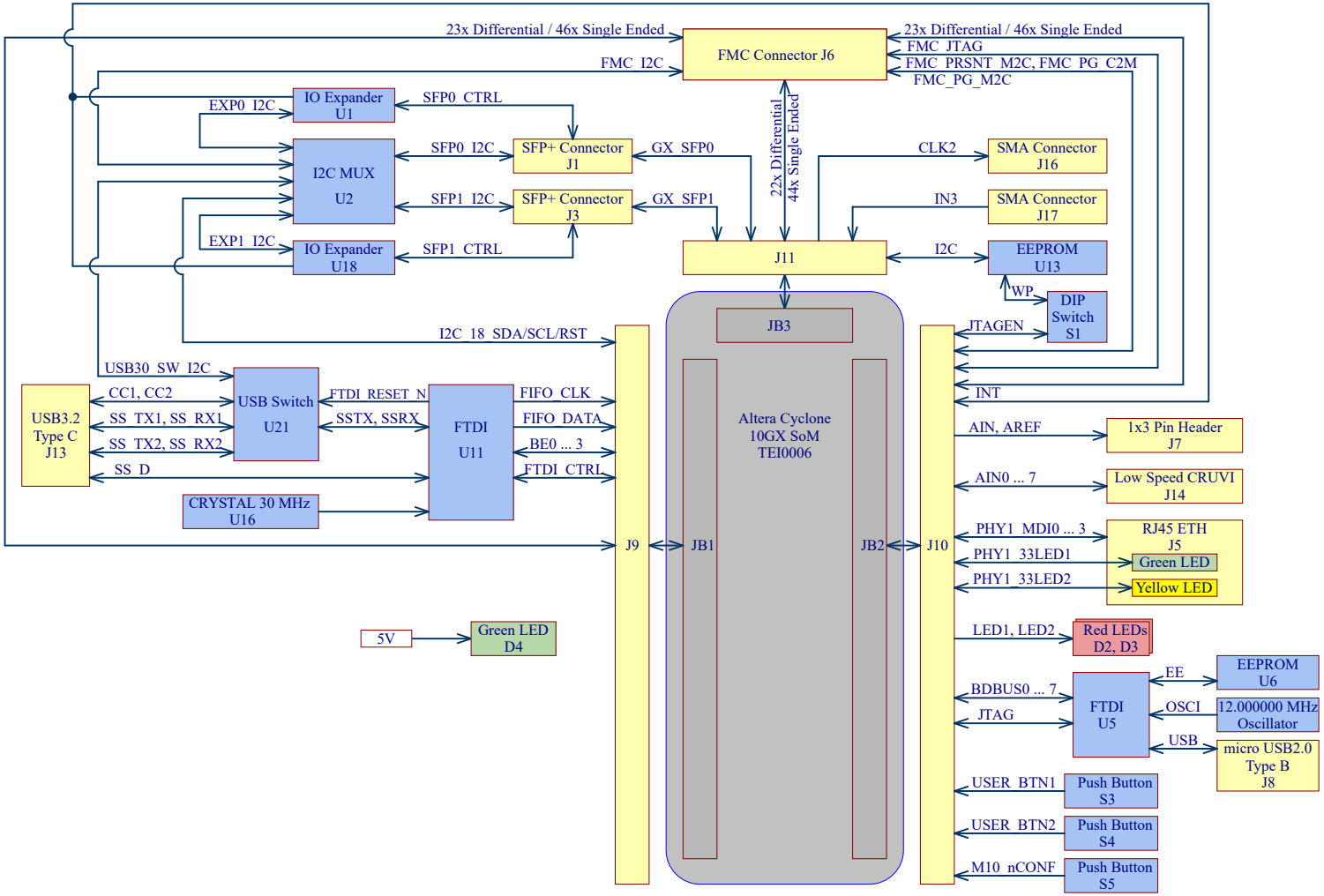

trenz electronic	Title: TEIB0006 - Overview		
A4	Number: TEIB0006 A		Rev. 03
Date: 2025-03-05	Copyright: Trenz Electronic GmbH		Page4 of 16
Filename: TEIB006.SchDoc			

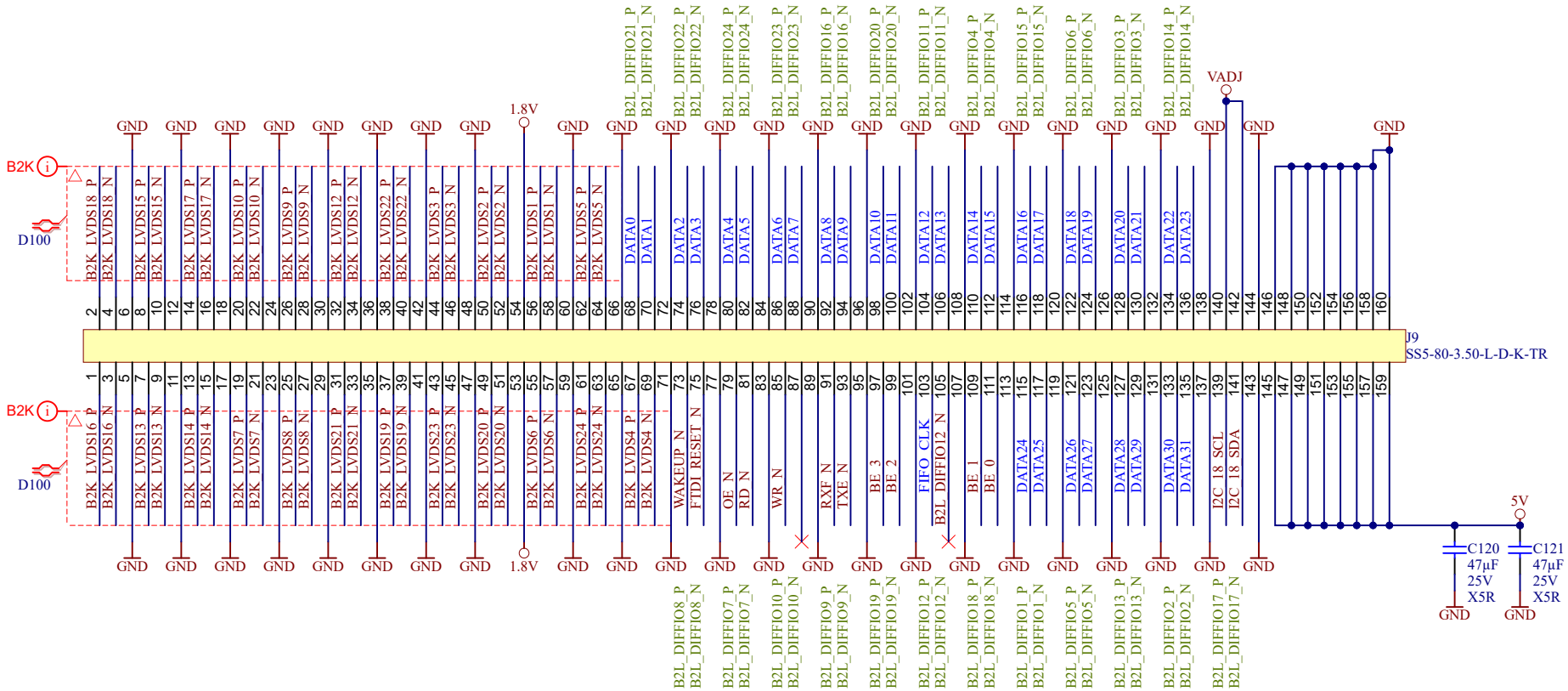

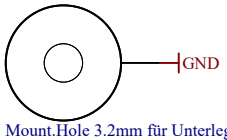

Mount.Hole 3.2mm für Unterlegscheibe

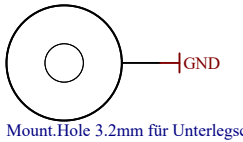

Mount.Hole 3.2mm für Unterlegscheibe

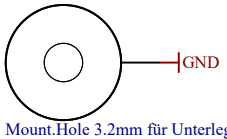

Mount.Hole 3.2mm für Unterlegscheibe

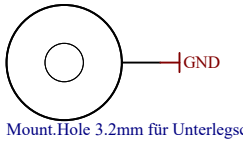

Mount.Hole 3.2mm für Unterlegscheibe

Title: TEIB0006 - B2B Connectors			
A4	Number: TEIB0006 A		Rev. 03
Date: 2025-03-05	Copyright: Trenz Electronic GmbH / TT		Page5 of 16
Filename: J1.SchDoc			

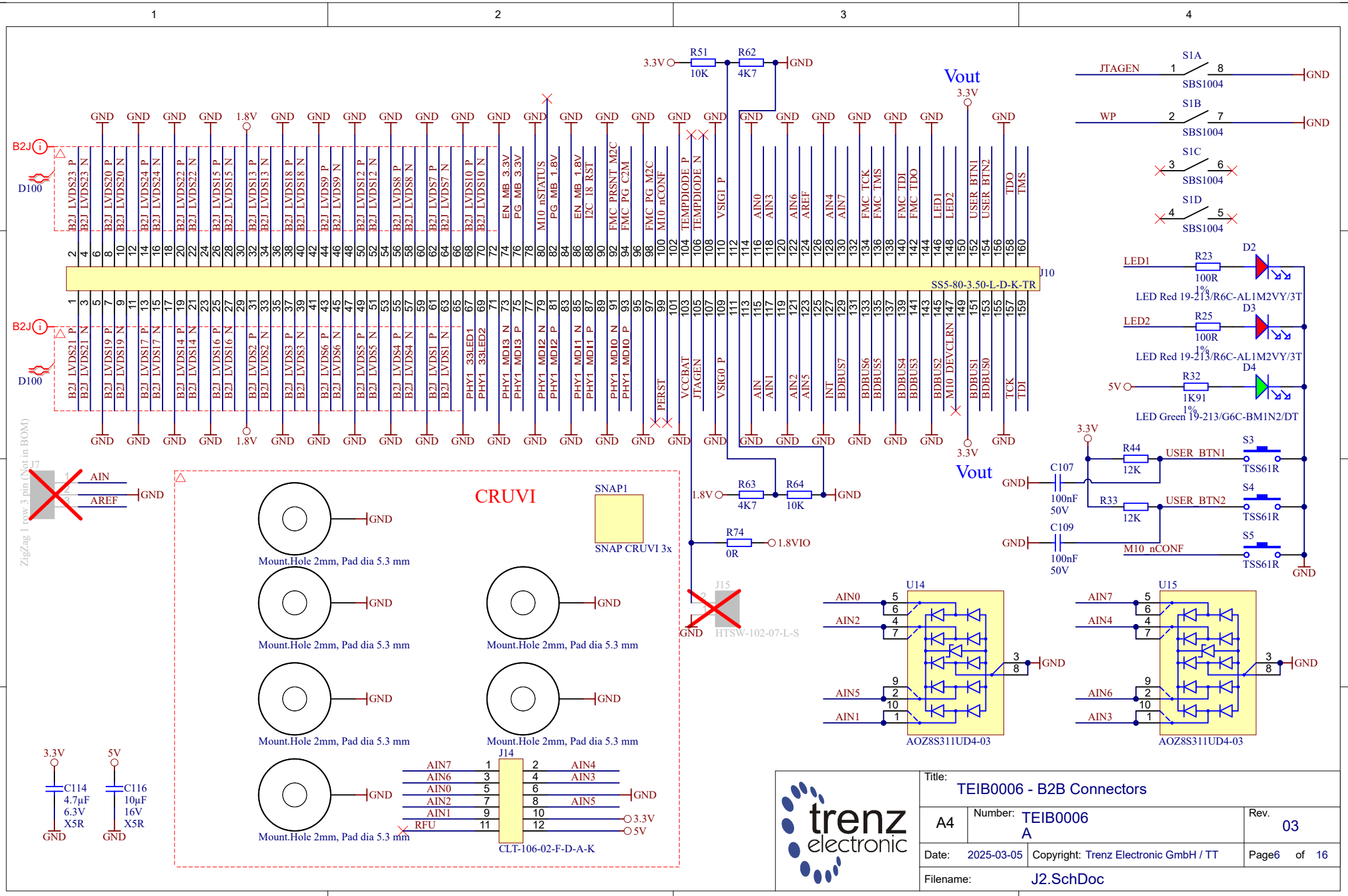
J10
SS5-80-3.50-L-D-K-TR
B2J
D100
Vout
3.3V
1.8V
5V
GND
R51 10K
R62 4K7
R63 4K7
R64 10K
R74 0R
1.8VIO
S1A SBS1004
S1B SBS1004
S1C SBS1004
S1D SBS1004
JTAGEN
WP
LED1
LED2
R23 100R 1%
R25 100R 1%
R32 1K91 1%
D2
D3
D4
LED Red 19-213/R6C-AL1M2VY/3T
LED Green 19-213/G6C-BM1N2/DT
R44 12K
R33 12K
C107 100nF 50V
C109 100nF 50V
USER_BTN1
USER_BTN2
M10_nCONF
S3 TSS61R
S4 TSS61R
S5 TSS61R
J7
AIN
AREF
ZigZag 1 row 3 pin (Not in BOM)
CRUVI
SNAP1
SNAP CRUVI 3x
Mount.Hole 2mm, Pad dia 5.3 mm
J15
HTSW-102-07-L-S
U14
U15
AOZ8S311UD4-03
C114 4.7µF 6.3V X5R
C116 10µF 16V X5R
J14
CLT-106-02-F-D-A-K
RFU
trenz electronic
Title: TEIB0006 - B2B Connectors
A4
Number: TEIB0006 A
Rev. 03
Date: 2025-03-05
Copyright: Trenz Electronic GmbH / TT
Page6 of 16
Filename: J2.SchDoc

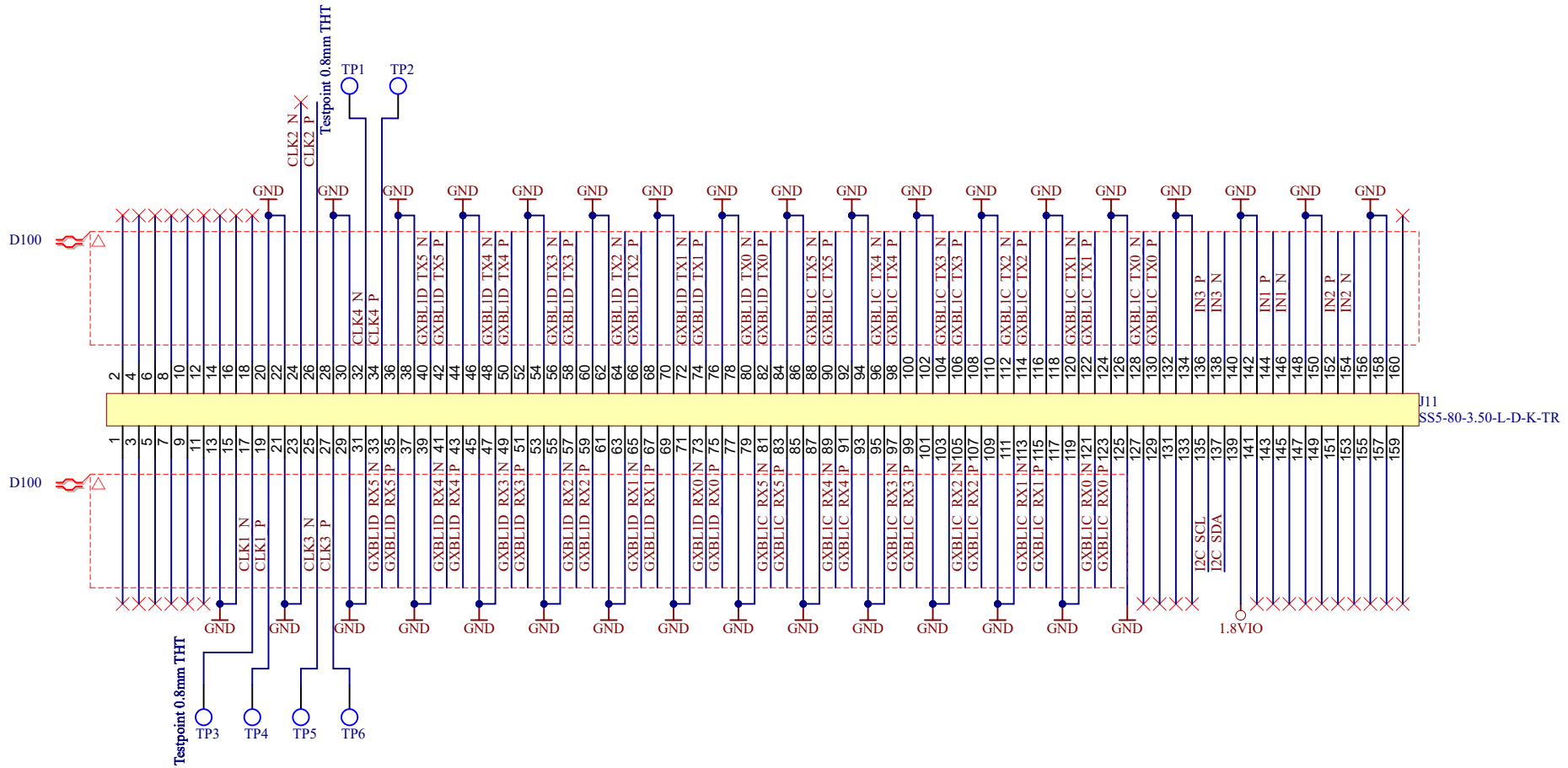

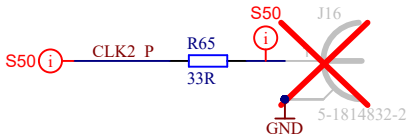

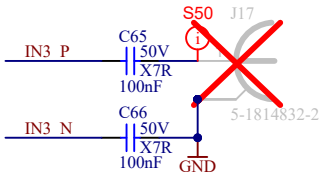

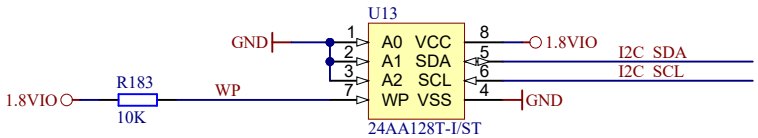

ADDR: 1010000

trenz electronic	Title: TEIB0006 - B2B Connectors		
A4	Number: TEIB0006 A		Rev. 03
Date: 2025-03-05	Copyright: Trenz Electronic GmbH / TT		Page7 of 16
Filename: J3.SchDoc			

The module signal ground contacts, VeeR and VeeT, should be isolated from the module case.

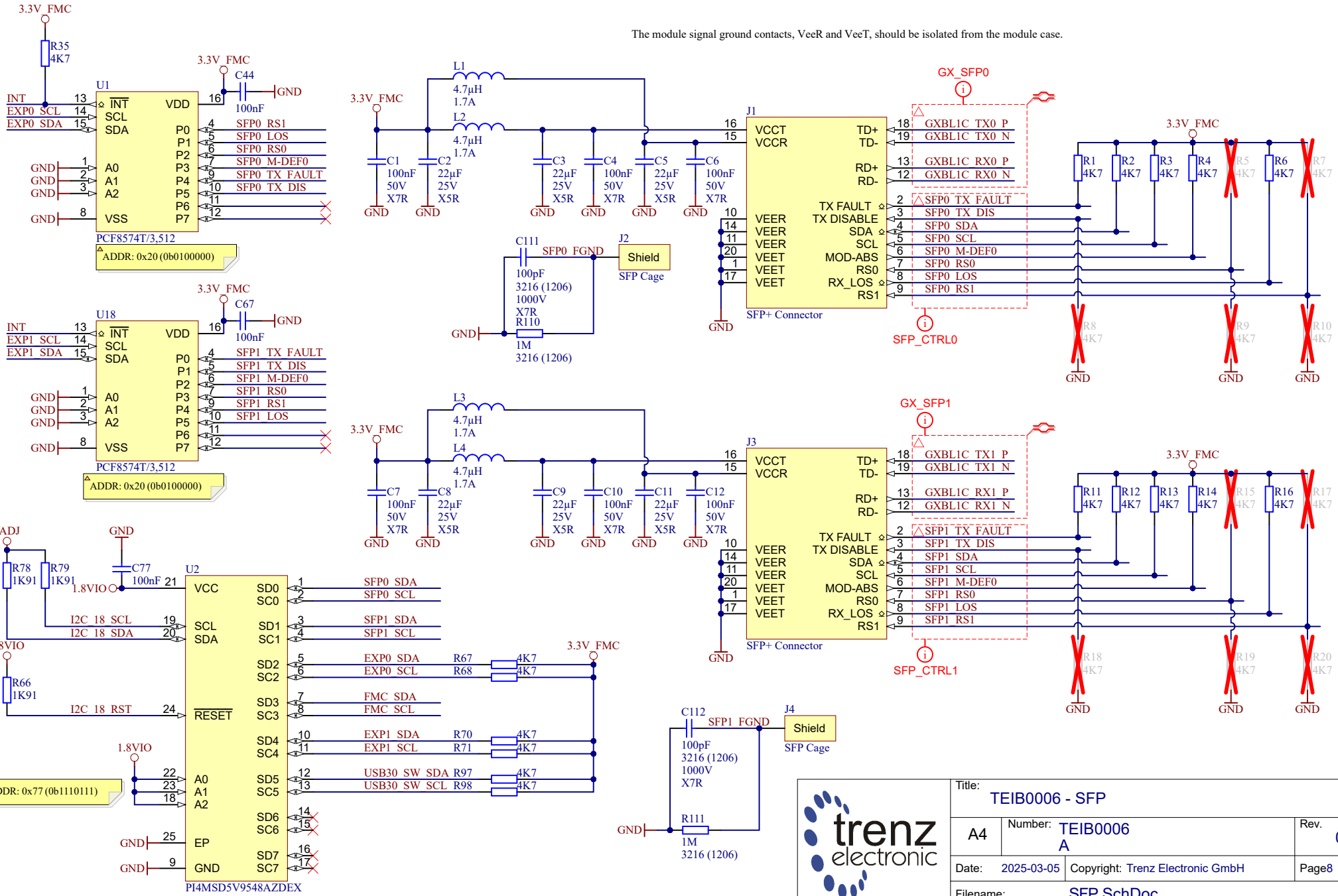

trenz electronic	Title: TEIB0006 - SFP		
A4	Number: TEIB0006 A		Rev. 03
Date: 2025-03-05	Copyright: Trenz Electronic GmbH		Page8 of 16
Filename: SFP.SchDoc			

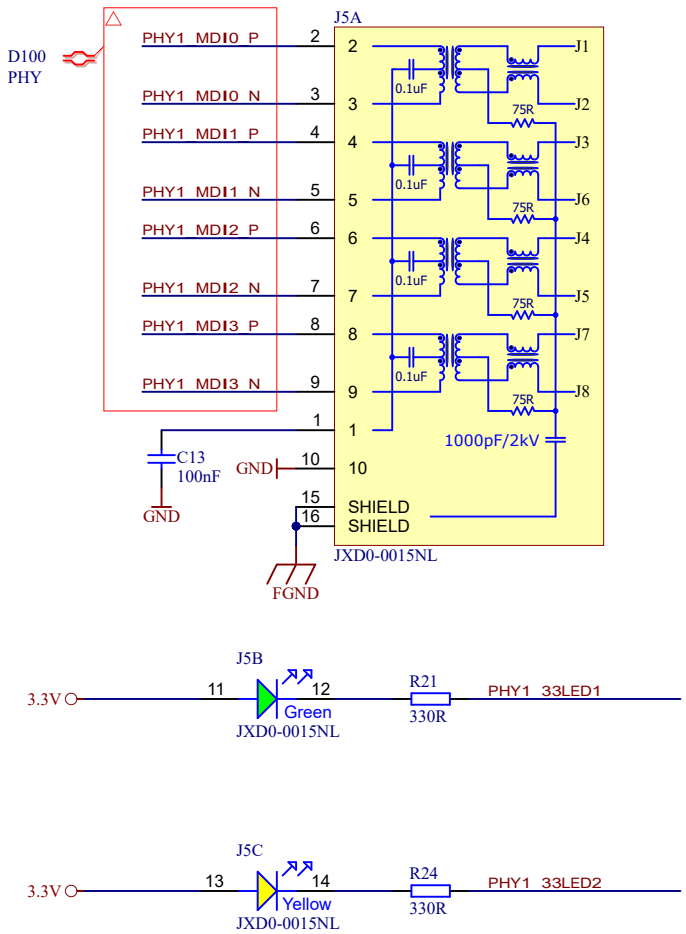

trenz electronic	Title: TEIB0006 - Ethernet		
A4	Number: TEIB0006 A		Rev. 03
Date: 2025-03-05	Copyright: Trenz Electronic GmbH		Page9 of 16
Filename: ETH.SchDoc			

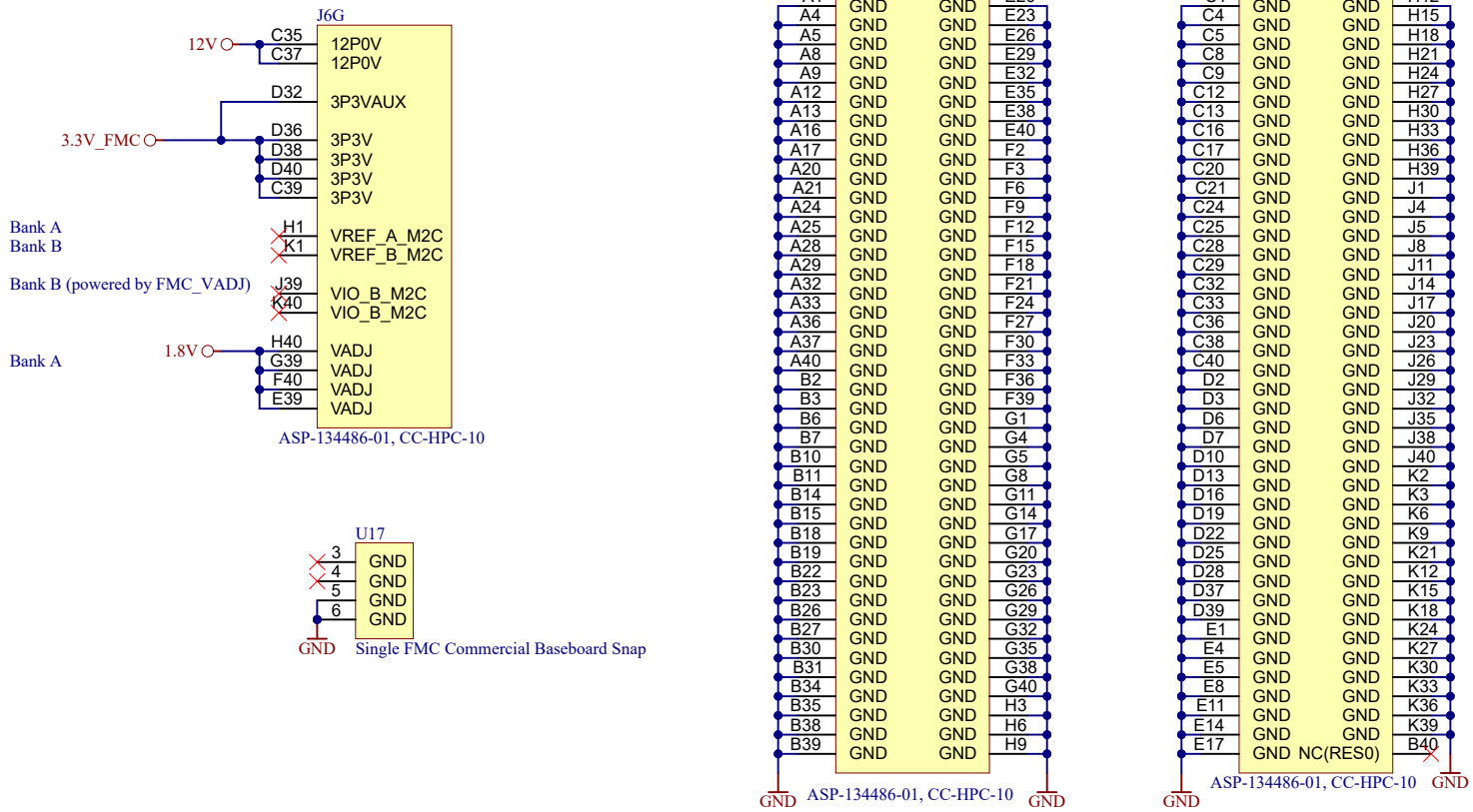

trenz electronic	Title: TEIB0006 - FMC PWR		
A4	Number: TEIB0006 A		Rev. 03
Date: 2025-03-05	Copyright: Trenz Electronic GmbH		Page10 of 16
Filename: FMC PWR.SchDoc			

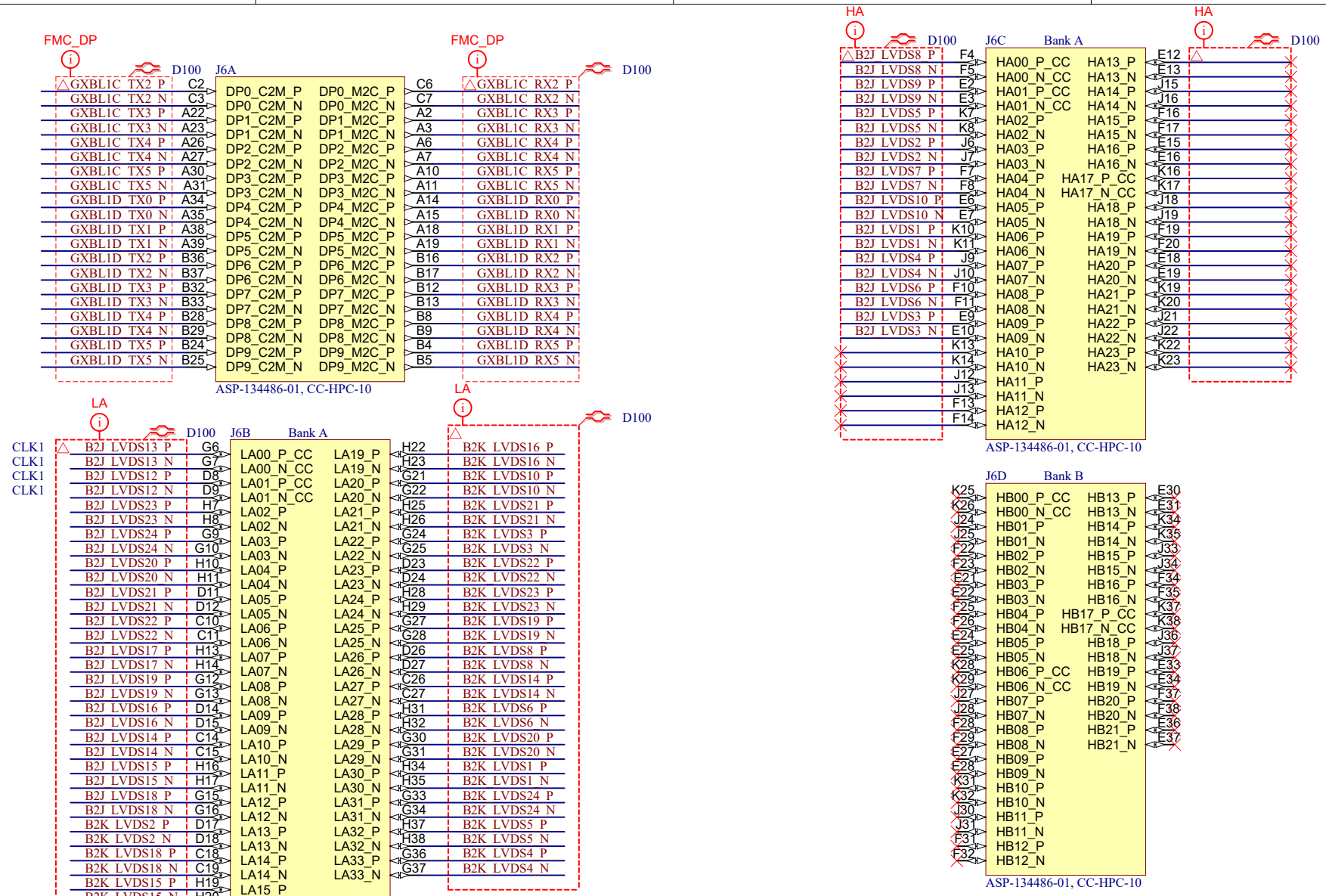

trenz electronic	Title: TEIB0006 - FMC		
A4	Number: TEIB0006 A		Rev. 03
Date: 2025-03-05	Copyright: Trenz Electronic GmbH		Page 11 of 16
Filename: FMC.SchDoc			

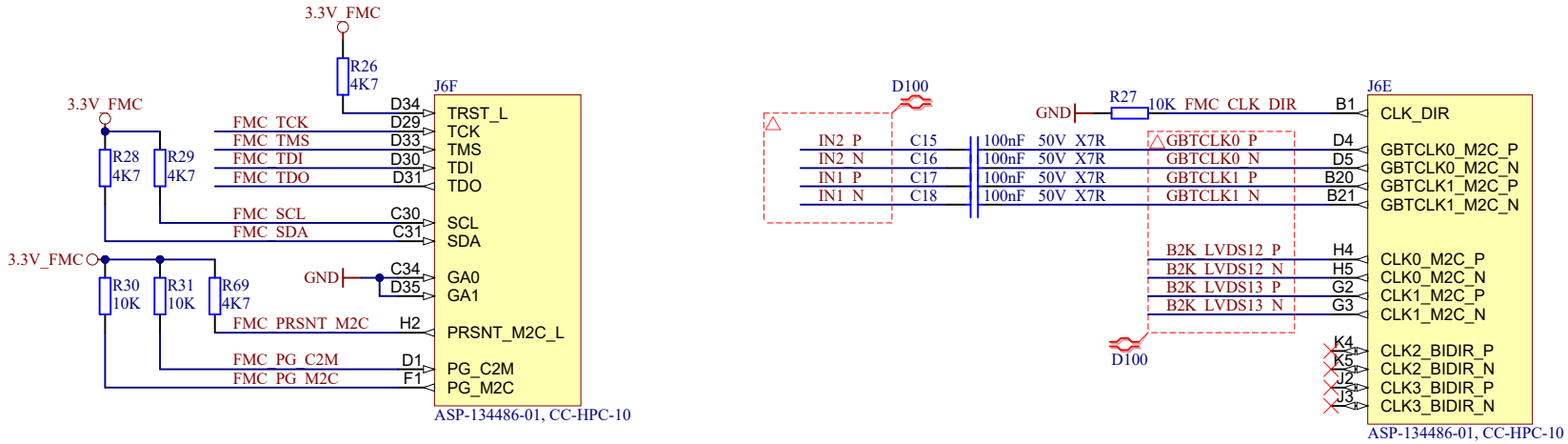

trenz electronic	Title: TEIB0006 - FMC_MISC		
A4	Number: TEIB0006 A		Rev. 03
Date: 2025-03-05	Copyright: Trenz Electronic GmbH		Page12 of 16
Filename: FMC_MISC.SchDoc			

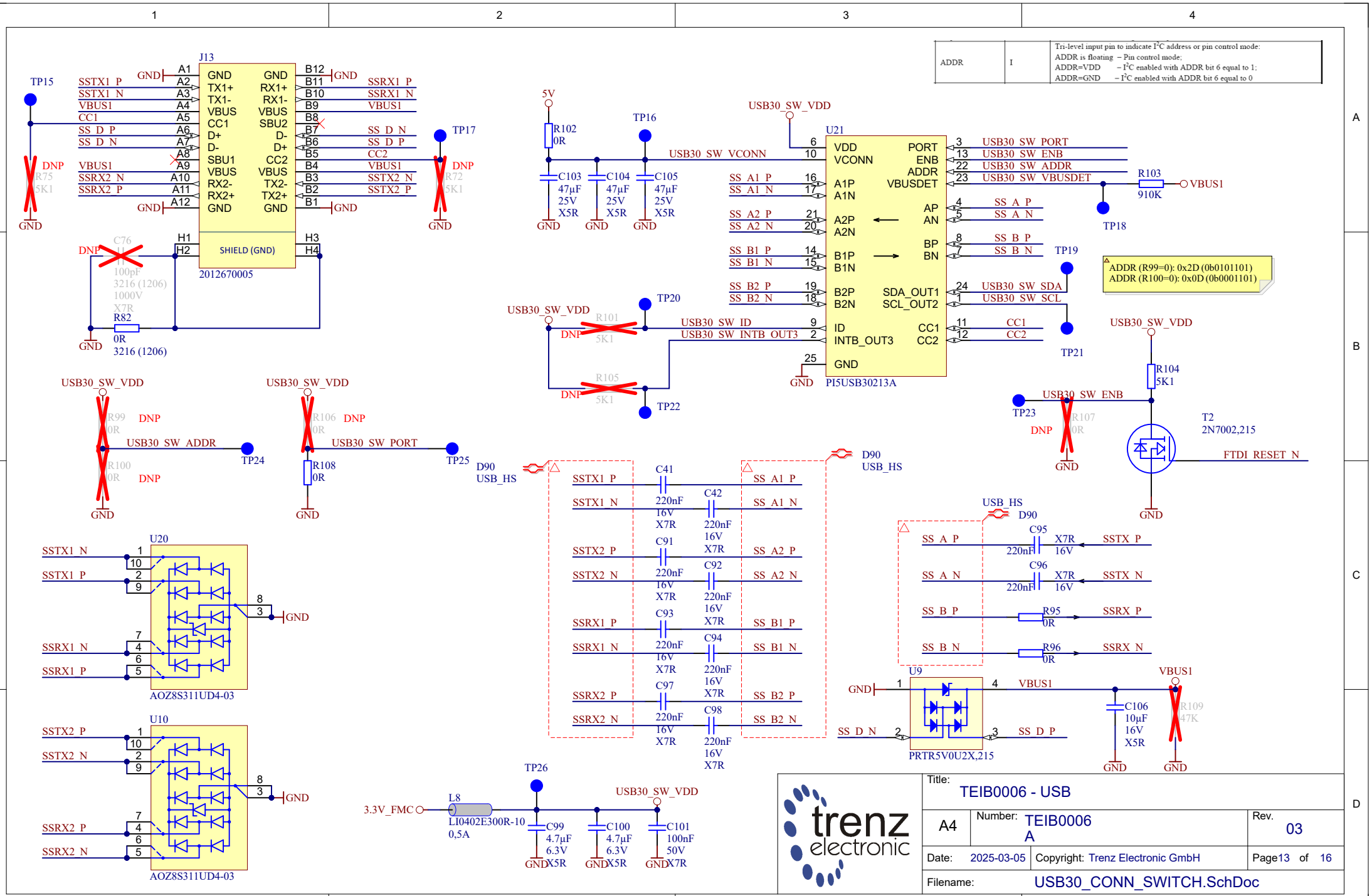
J13
2012670005
SHIELD (GND)
TP15
TP17
TP16
TP18
TP19
TP20
TP21
TP22
TP23
TP24
TP25
TP26
U21
PI5USB30213A
U20
AOZ8S311UD4-03
U10
AOZ8S311UD4-03
U9
PRTR5V0U2X,215
D90
USB_HS
T2
2N7002,215
L8
LI0402E300R-10
0,5A
3.3V_FMC
USB30_SW_VDD
USB30_SW_VCONN
USB30_SW_PORT
USB30_SW_ENB
USB30_SW_ADDR
USB30_SW_VBUSDET
USB30_SW_SDA
USB30_SW_SCL
USB30_SW_ID
USB30_SW_INTB_OUT3
FTDI_RESET_N
VBUS1
ADDR (R99=0): 0x2D (0b0101101)
ADDR (R100=0): 0x0D (0b0001101)
ADDR | I | Tri-level input pin to indicate I²C address or pin control mode: ADDR is floating – Pin control mode; ADDR=VDD – I²C enabled with ADDR bit 6 equal to 1; ADDR=GND – I²C enabled with ADDR bit 6 equal to 0
trenz electronic
Title: TEIB0006 - USB
A4
Number: TEIB0006 A
Rev. 03
Date: 2025-03-05
Copyright: Trenz Electronic GmbH
Page13 of 16
Filename: USB30_CONN_SWITCH.SchDoc

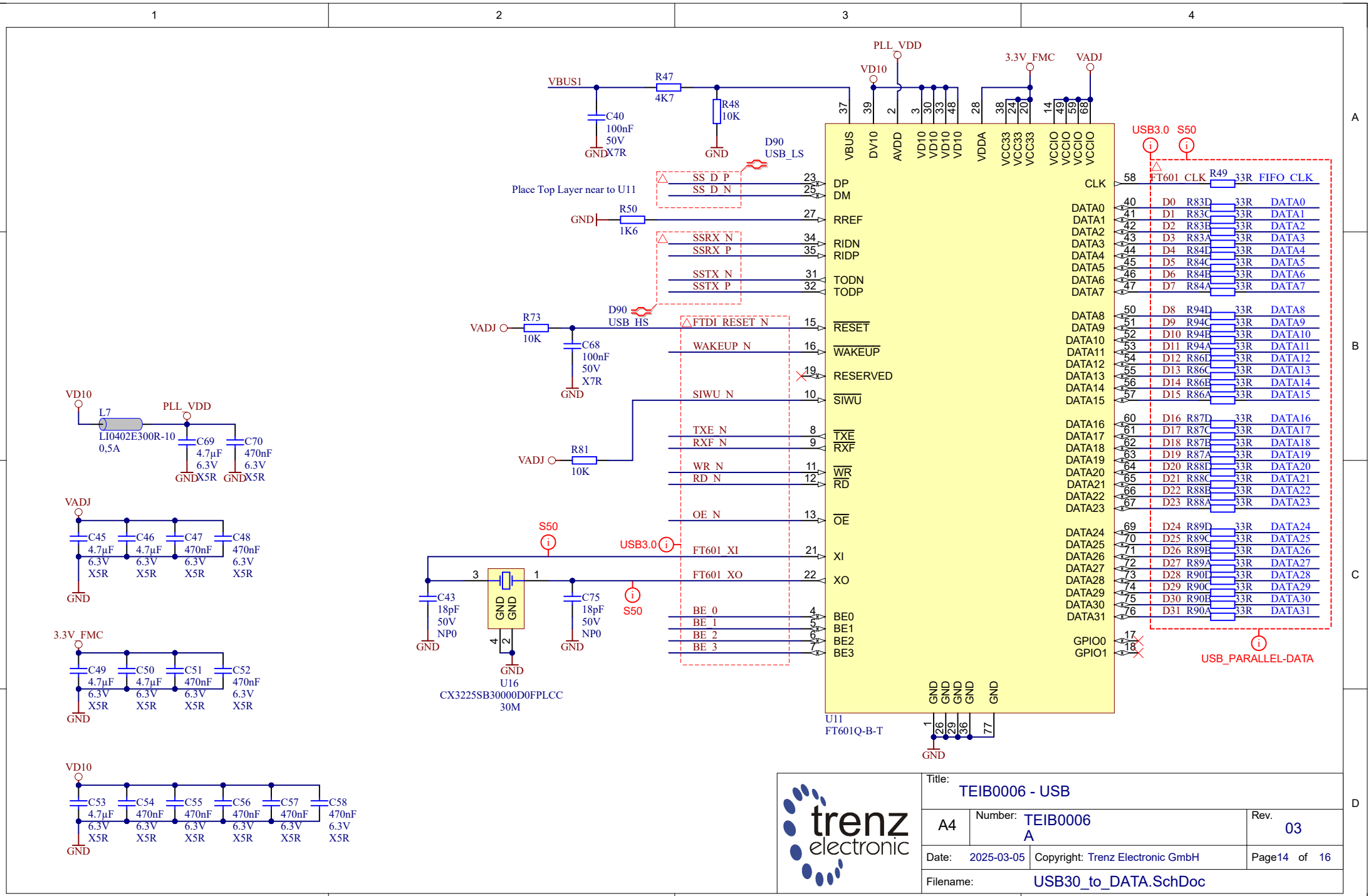

trenz electronic	Title: TEIB0006 - USB		
A4	Number: TEIB0006 A		Rev. 03
Date: 2025-03-05	Copyright: Trenz Electronic GmbH		Page14 of 16
Filename: USB30_to_DATA.SchDoc			

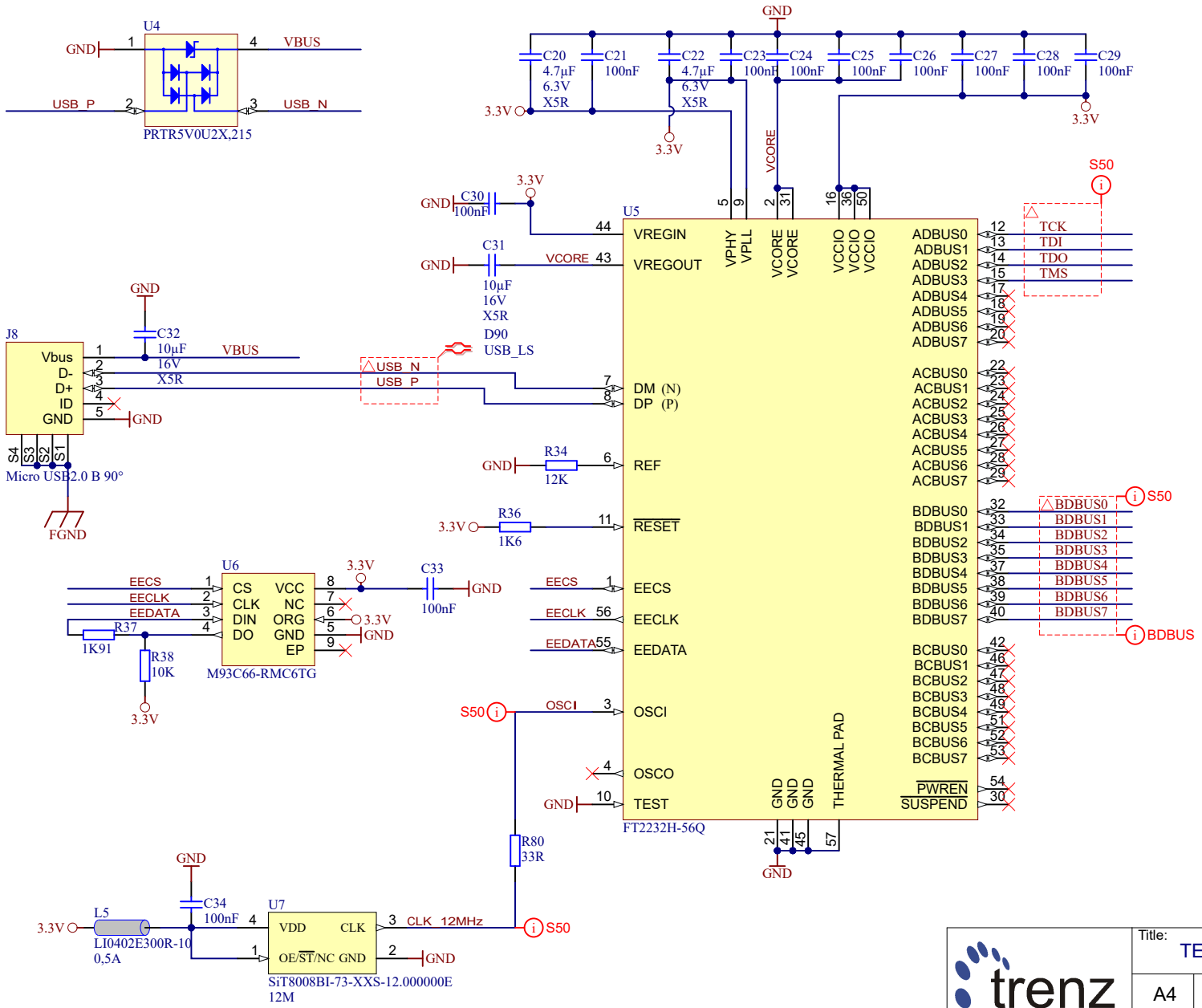

trenz electronic	Title: TEIB0006 - FTDI		
A4	Number: TEIB0006 A		Rev. 03
Date: 2025-03-05	Copyright: Trenz Electronic GmbH		Page15 of 16
	Filename: FTDI.SchDoc		

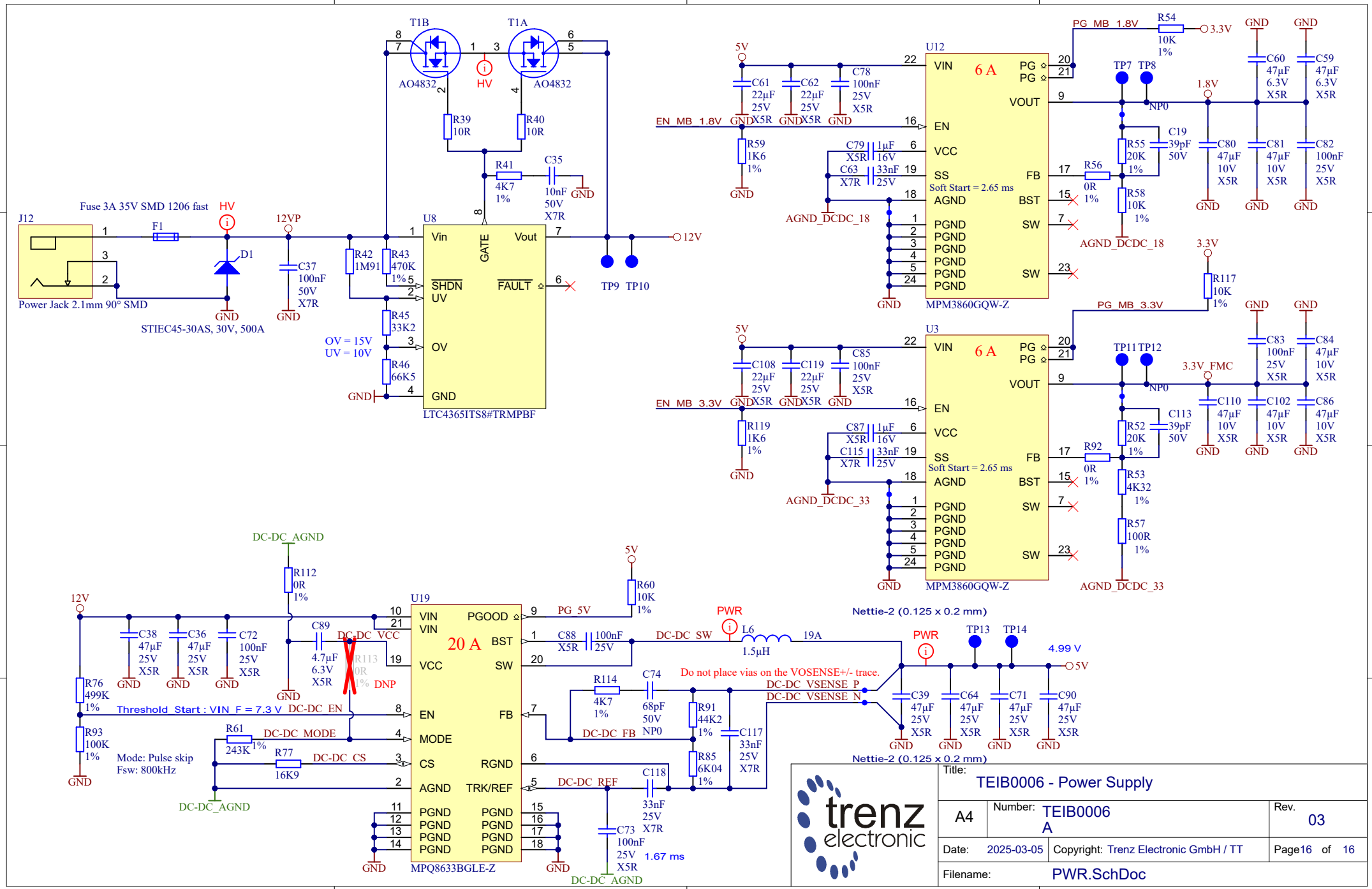

Title:	TEIB0006 - Power Supply		
A4	Number: TEIB0006 A		Rev. 03
Date: 2025-03-05	Copyright: Trenz Electronic GmbH / TT		Page16 of 16
Filename:	PWR.SchDoc		