This document contains data proprietary to PUI Audio Inc. Any use or reproduction, in any form, without prior written permission of PUI Audio Inc. is prohibited.
©2026, PUI Audio Inc.

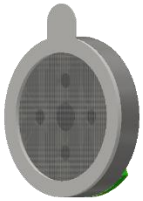

Data Sheet	AR01032MR-2-R

Specifications

Parameters	Values	Units
Rated Input Power	10	mW
Max Input Power	20	mW
Impedance	32 ± 15%	Ohms
Sensitivity (SPL) f = 1kHz V_{DRIVE} = 179mV_{RMS} Type 3.2 HL Ear	110 ± 3	dB Pa/V
Resonant Frequency	1259	Hz
Frequency Range	300 ~ 3,400	Hz
Buzz, Rattle, etc.	Should not be audible with 179 mV sine wave from 300 Hz to 3.4 kHz	-
Polarity	When positive voltage is applied to the positive terminal, the diaphragm will move outward	-
Frame Material	SPCC	-
Magnet Material	NdFeB	-
Diaphragm Material	Mylar	-
Weight	0.5	gr
Operating Temperature	$-30 \leq T_O \leq 70$	°C
Storage Temperature	$-40 \leq T_S \leq 85$	°C
Environmental Compliances	ROHS/REACH	-

This document contains data proprietary to PUI Audio Inc. Any use or reproduction, in any form, without prior written permission of PUI Audio Inc. is prohibited.
©2026, PUI Audio Inc.

Measurement Method (Note: measured with V_{DRIVE} = 179mV_{RMS}, Temperature: 15°C ≤ T_A ≤ 35°C, Relative Humidity: 25% ≤ RH ≤ 75%)

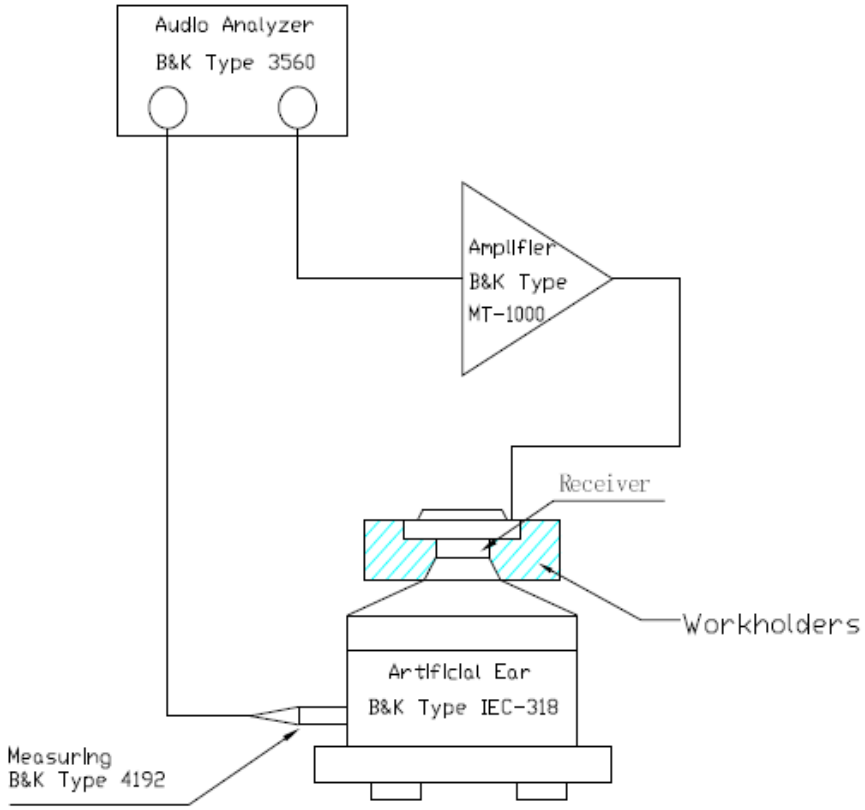

Frequency Response (V_{DRIVE} = 179mV_{RMS}.)

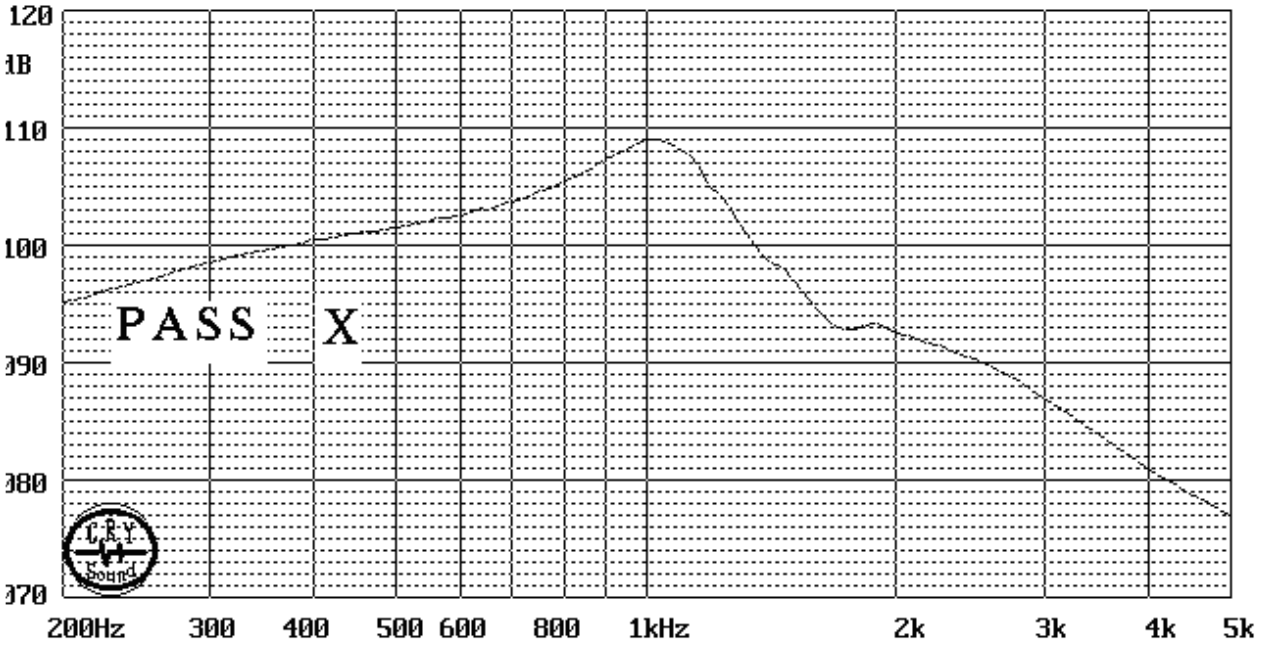

This document contains data proprietary to PUI Audio Inc. Any use or reproduction, in any form, without prior written permission of PUI Audio Inc. is prohibited.
©2026, PUI Audio Inc.

Reliability Testing (Note: After each test, the speaker's SPL shall be ±3 dB of the original SPL after 6 hours of recovery.)

Type of Test	Test Specifications
High Temperature Test	96 hours at +85°C ± 2°C
Low Temperature Test	96 hours at -40°C ± 3°C
Humidity Test	48 hours at +40°C ± 2°C with relative humidity at 90-95% relative humidity
Temperature Cycle Test	The part shall be subjected to 4 cycles. One cycle shall be 6 hours and consist of 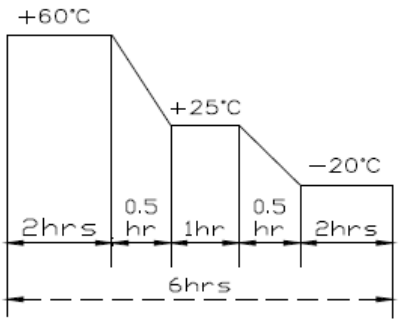
Vibration Test	Frequency 30 ± 15 Hz, Amplitude 1.5 mm for 3 hours
Drop Test	75 cm free fall on concrete floor, 10 times
Load Test and Max Power Test	White noise is applied at the speakers rated power for 96 hours at room temperature

Dimensions

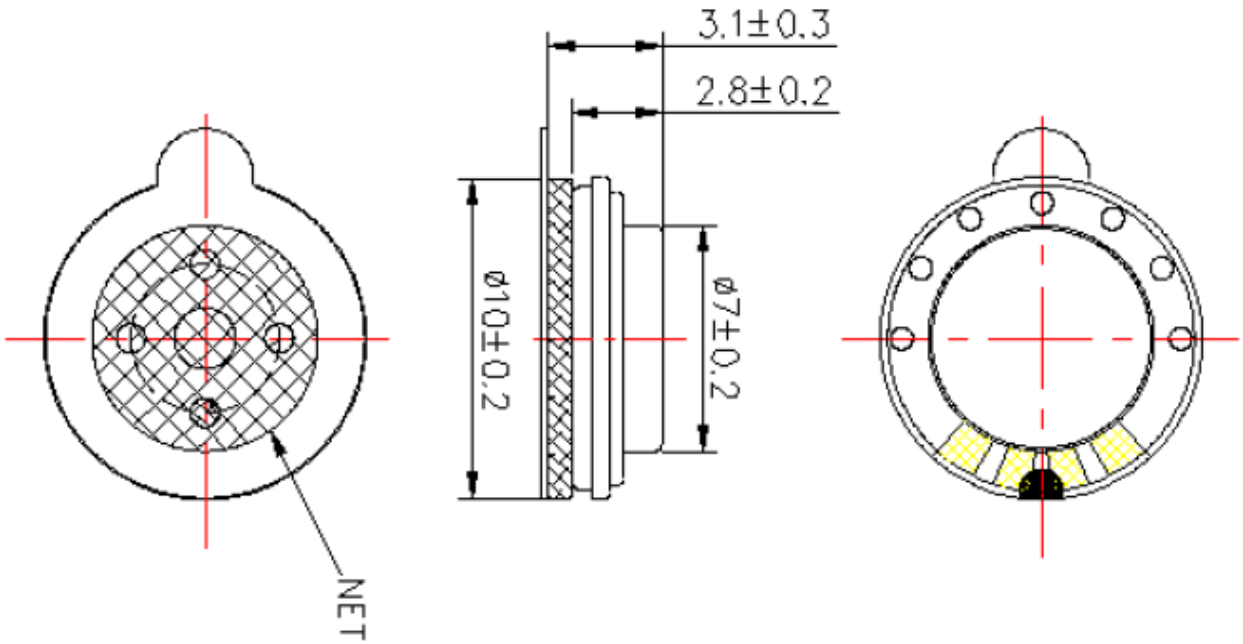

This document contains data proprietary to PUI Audio Inc. Any use or reproduction, in any form, without prior written permission of PUI Audio Inc. is prohibited.
©2026, PUI Audio Inc.

Packaging

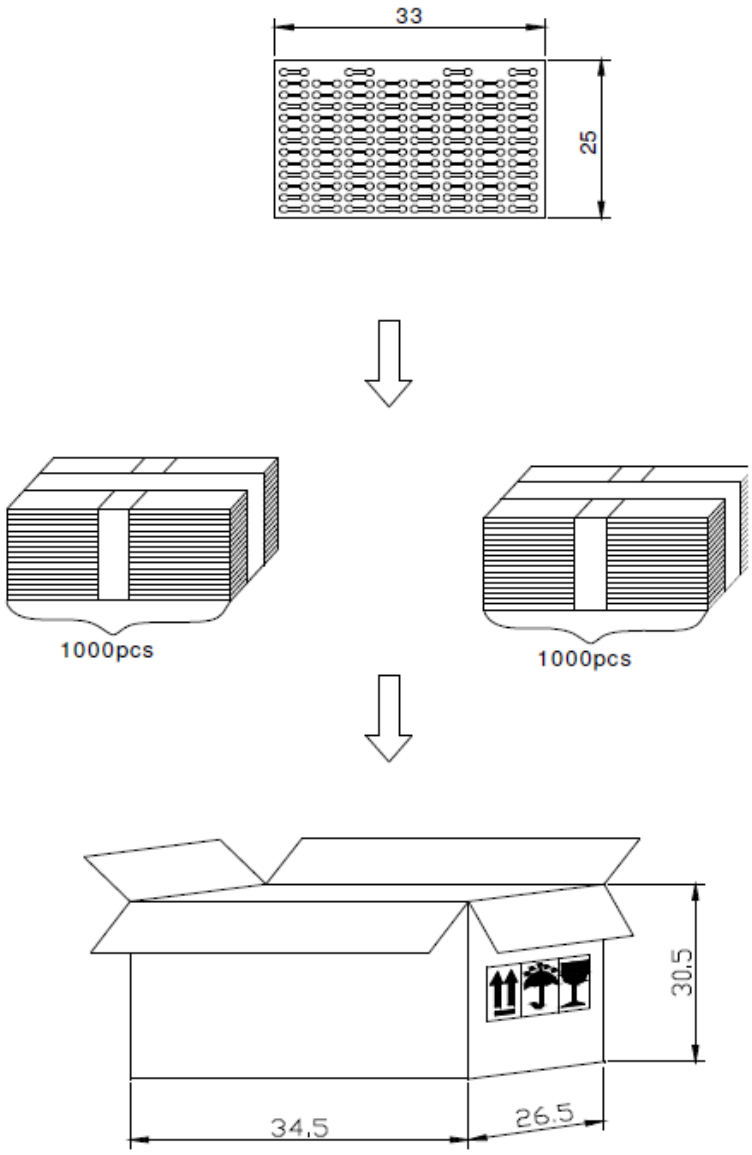

Specifications Revisions

Revision	Description	Date	Approved
A	Released from Engineering	7/22/2015	-
B	Updated Resonant Frequency	7/24/2026	KH

Note:
1. Unless otherwise specified:
   A. All dimensions are in millimeters.
   B. Default tolerances are ±0.5mm and angles are ±3°.
2. Specifications subject to change or withdrawal without notice