REV	REVISIONS	DRN	CKD	APP	DATE
A	NEW RELEASE	LD		NO	12-19-19

✳ DENOTES CRITICAL DIMENSION OR SPECIFICATION.

NOTES:
1. COMPONENT TO BE MOLDED IN A CLEAR TRANSMISSIVE POLYCARBONATE.
2. COMPONENT DESIGNED TO BE PRESSED INTO A P.C. BOARD.
3. LIGHTSOURCE: RED/GREEN SMT BI-COLOR LED; DIALIGHT P/N: 597-77X1-5XXF & YELLOW SMT SINGLE; 597-3XX1-5XXF.
4. DIALIGHT PART NUMBER: 515-1118F.
5. LIGHTPIPE USED WITH SFP CAGE ASSEMBLY. ASSEMBLY MEETS SMALL FORM-FACTOR PLUGGABLE (SFP) TRANSCEIVER MULTISOURCE AGREEMENT (MSA).

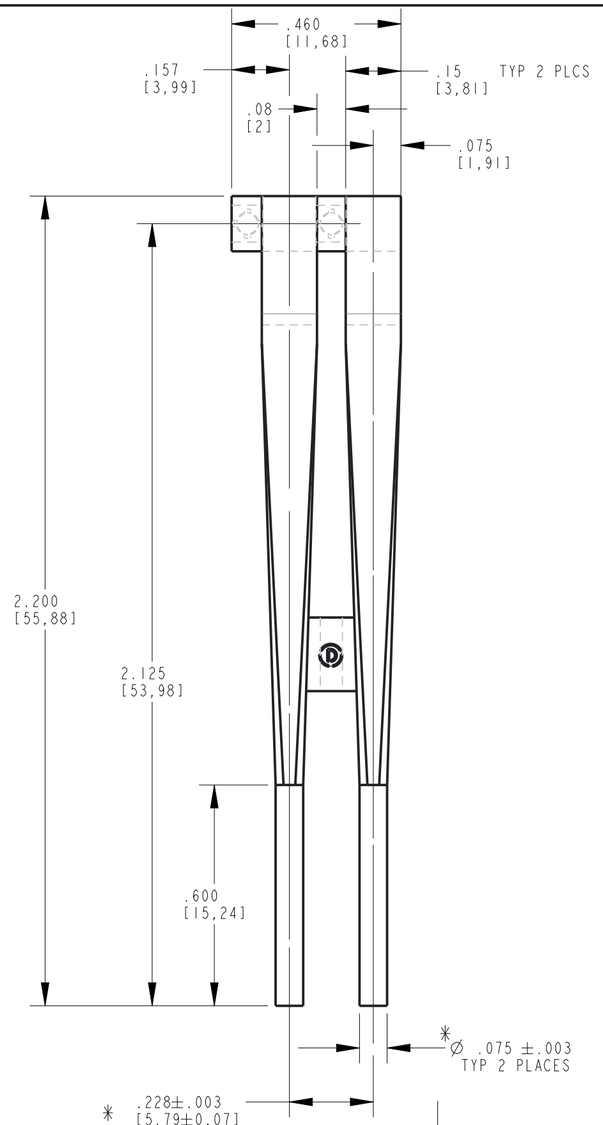

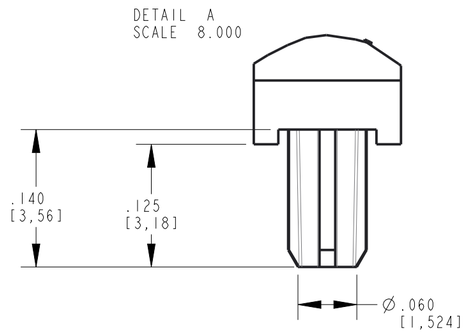

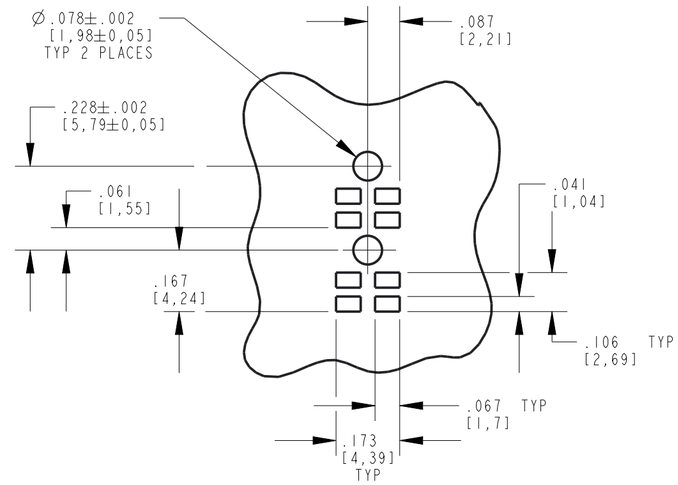

SOLDER PAD LAYOUT
BI-COLOR
SCALE 3.0

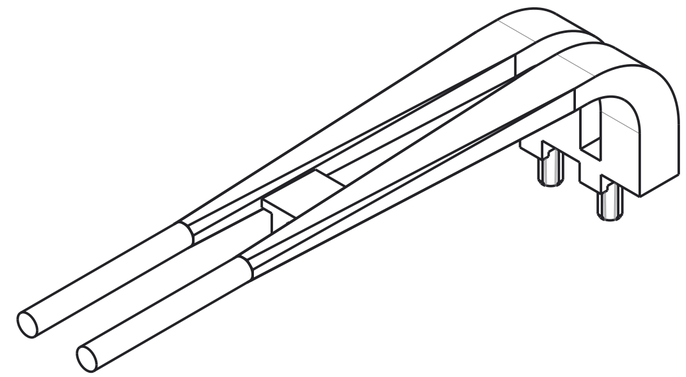

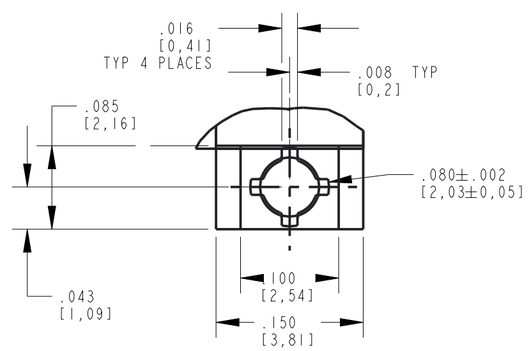

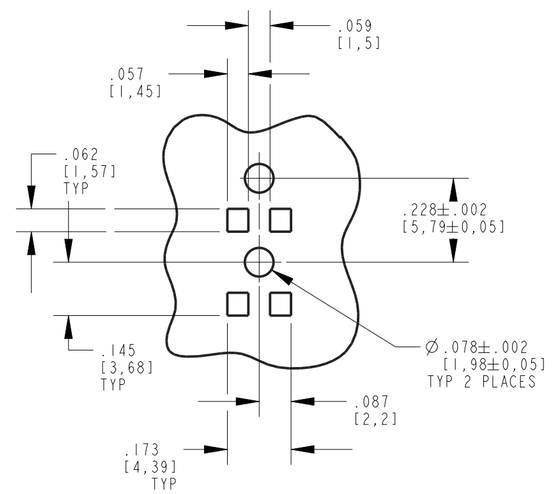

SOLDER PAD LAYOUT
SINGLE COLOR
SCALE 3.0

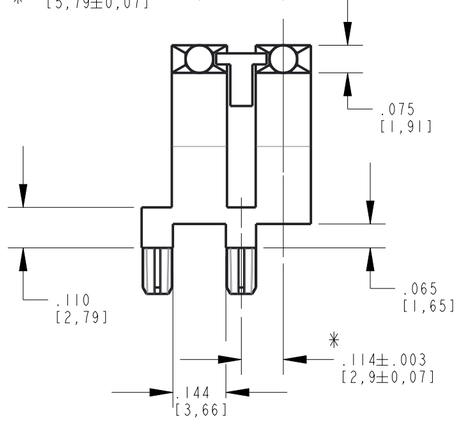

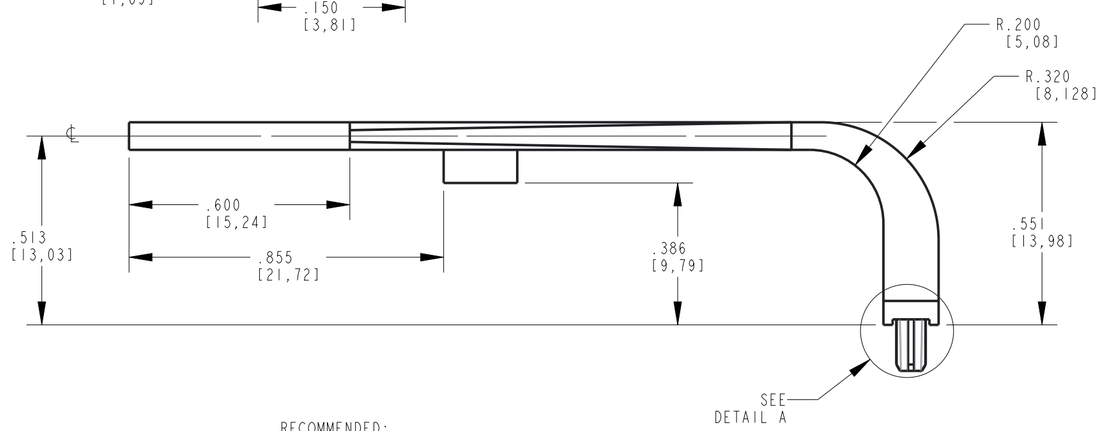

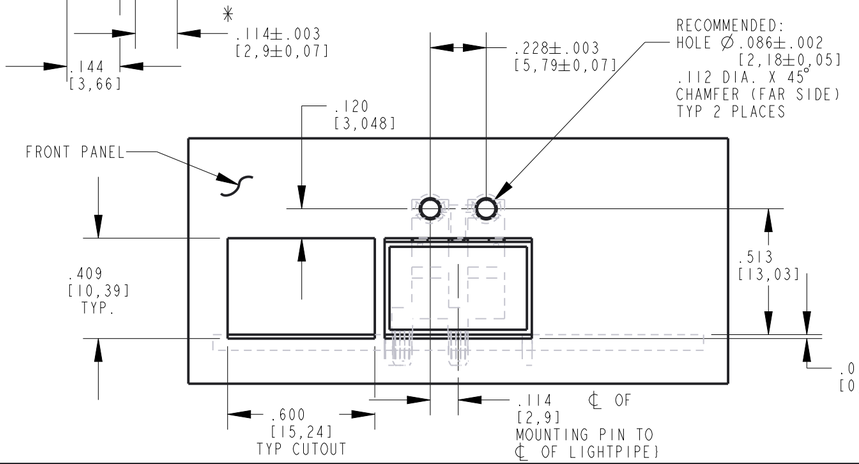

TYPICAL LIGHTPIPE APPLICATION
USED WITH (SFP) CAGE ASSEMBLY
SCALE 2.000

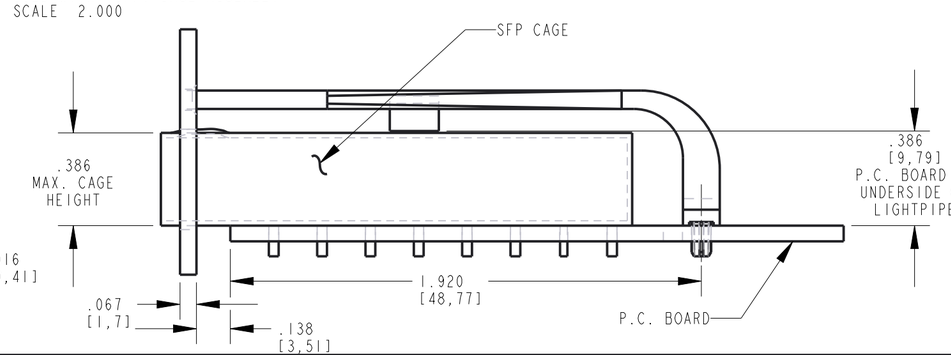

THIS DRAWING AND THE CONTENTS HEREIN ARE CONFIDENTIAL AND THE SOLE PROPERTY OF DIALIGHT CORP. REPRODUCTION OF THIS DRAWING OR CONSTRUCTION OF ANY PARTS WITHIN THIS DRAWING ARE FORBIDDEN WITHOUT THE WRITTEN CONSENT OF DIALIGHT CORP.

DIALIGHT CORP INTERNAL REFERENCE ONLY : 3D MODEL : 515118-D.5

SCALE: 3.00

ALL DIM'S IN: INCHES (MM)

TOLERANCES:
UNLESS OTHERWISE SPECIFIED
FRACTIONS: ±1/64
DECIMALS (.XX): ±.01
DECIMALS (.XXX): ±.005
DECIMALS (.XXXX): ±.0005
ANGLES: ±1°

FINISH

FSCM 83330

DRAWING NUMBER: C-18461

REV: A

TITLE: 2 ELEMENT LIGHTPIPE

MATERIAL: SEE NOTE 1

Dialight
1501 ROUTE 34 SOUTH
FARMINGDALE, NJ 07727
(732) 919-3119
www.dialight.com

SHEET 1 OF 1

FAMILY TABLE: