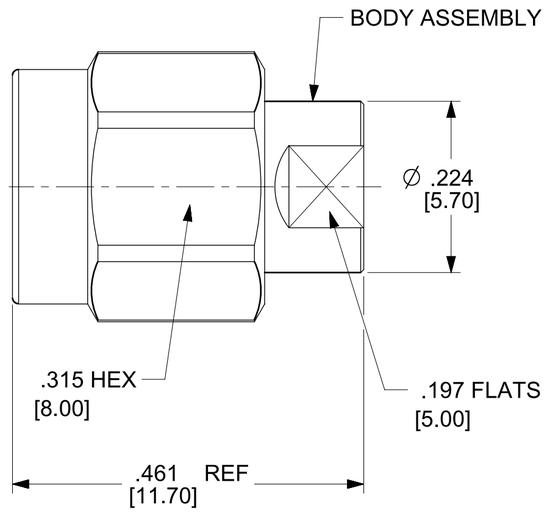

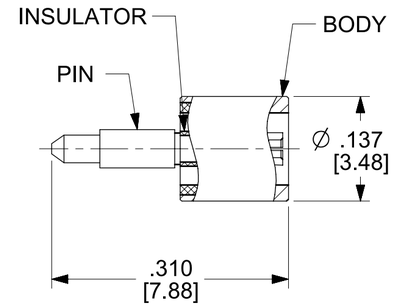

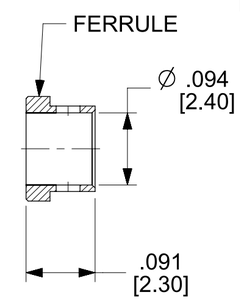

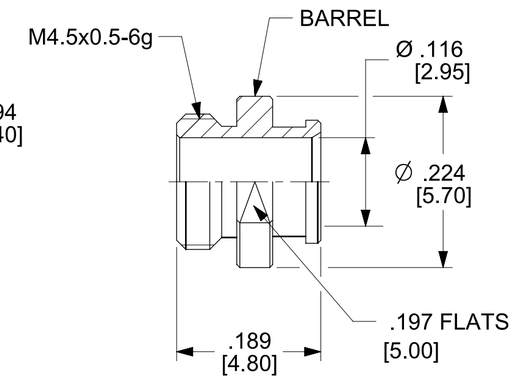

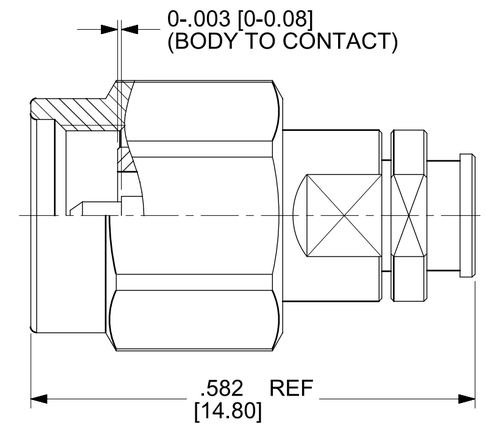

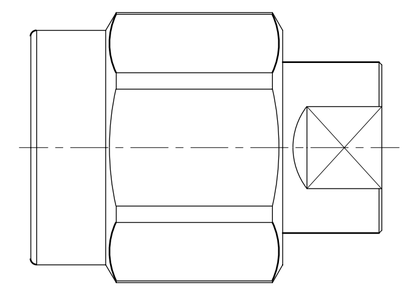

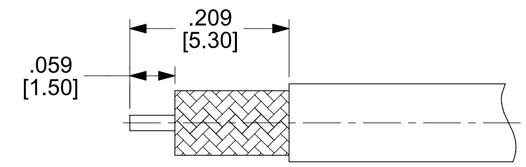

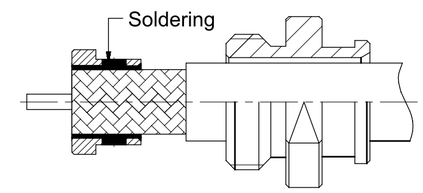

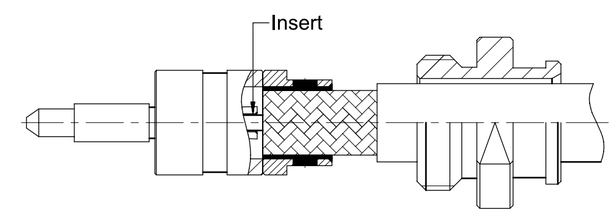

Recommended torque 7-10 in-lbs

CABLE ASSEMBLY INSTRUCTIONS

NOTES:

1. MATERIALS:
   - CONTACT & LOCK RING: BERYLLIUM COPPER
   - FERRULE: BRASS
   - INSULATOR: PEEK
   - ALL OTHER METAL PARTS: STAINLESS STEEL
2. FINISH:
   - CONTACT & FERRULE: GOLD
   - LOCK RING: ALBALOY
   - ALL OTHER METAL PARTS: PASSIVATED
3. ELECTRICAL:
   - IMPEDANCE: 50Ω
   - FREQUENCY RANGE: DC TO 40GHz
   - VSWR: 1.30 MAX

MOLEX P/N: 0732520320

FUNCTIONAL SYMBOLS
FA = 0
FC = 0
FP = 0
DIVISIONAL SYMBOLS

THIS DRAWING CONTAINS INFORMATION THAT IS PROPRIETARY TO MOLEX ELECTRONIC TECHNOLOGIES, LLC AND SHOULD NOT BE USED WITHOUT WRITTEN PERMISSION

DIMENSION UNITS	SCALE
INCH/MM	NTS

GENERAL TOLERANCES (UNLESS SPECIFIED)

	MM	INCH
4 PLACES	±	±
3 PLACES	± 0.1000	±
2 PLACES	± 0.200	±
1 PLACE	± 0.30	±
0 PLACES	±	±
ANGULAR TOL	± 5°	

DRAFT WHERE APPLICABLE MUST REMAIN WITHIN DIMENSIONS

CURRENT REV DESC: FIXED RECOMMENDED CABLE STRIP DIM WAS .205[5.20] NOW .209[5.30].

STATUS: Production
DRWN: James Borrelli 2024-10-16
CHK'D: Les Meier 2024-10-17
APPR: Kevin Tagan 2024-10-17

FIRST ANGLE PROJECTION | DRAWING: C-SIZE | SERIES: 73252

molex

2.92mm MALE FOR .086 CABLE
EWR16564-A

PRODUCT CUSTOMER DRAWING

DOCUMENT NUMBER	DOC TYPE	DOC PART	REVISION
732520320	PSD	000	A2

MATERIAL NUMBER	CUSTOMER	SHEET NUMBER
0732520320		1 OF 1

FORMAT: 9x-TC-db-prod-C
REVISION: B
DATE: 2022/08/01