| PART NUMBER | PLATINGS ON THE CONTACT AREAS |
|---|---|
| 213205-0001 | SILVER OVER NICKEL |
| 213205-0101 | TIN OVER NICKEL |

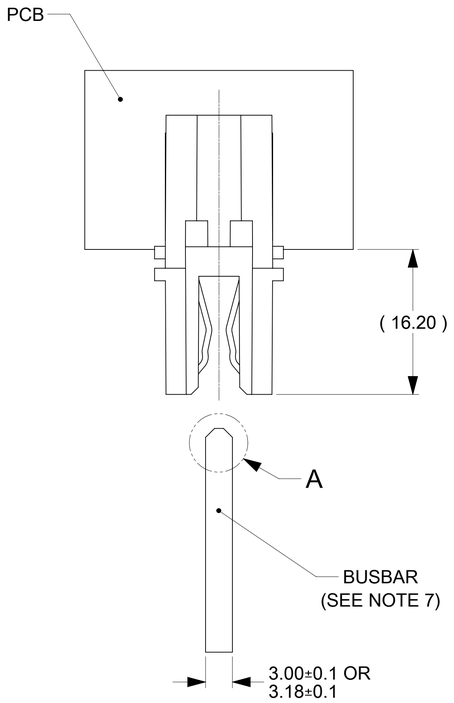


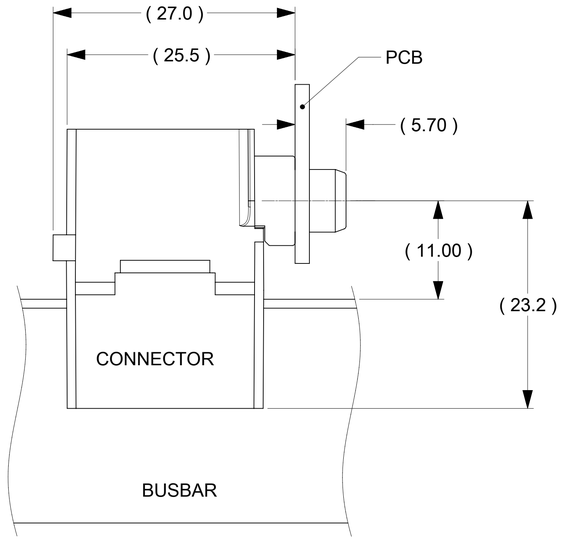


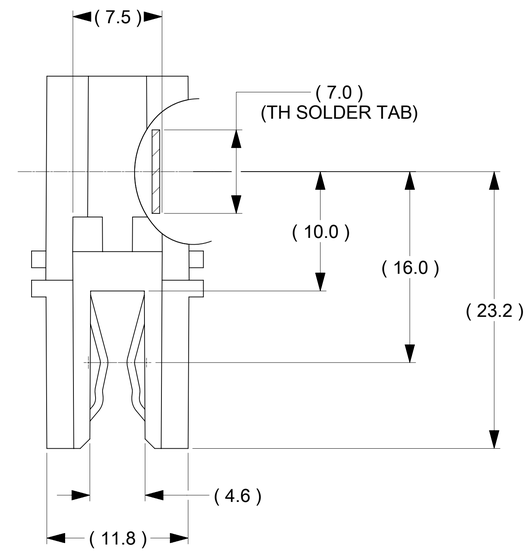


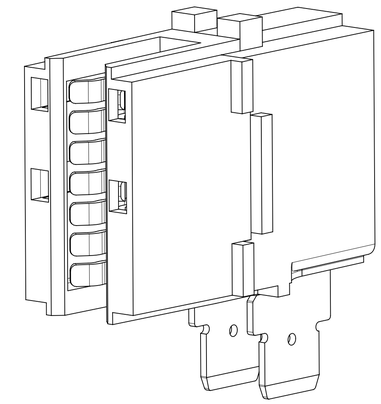

PCB, BUSBAR
IN THESE VIEWS ARE SHOWN FOR REFERENCE ONLY

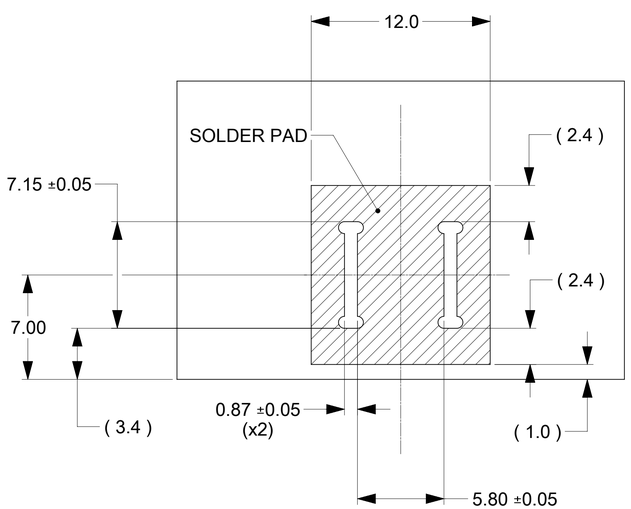


RECOMMENDED PCB LAYOUT
(THICKNESS 4.8mm MAX.)

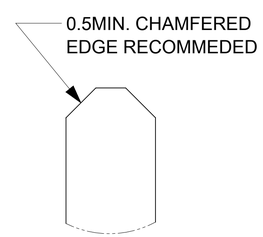


DETAIL A
SCALE 10:1

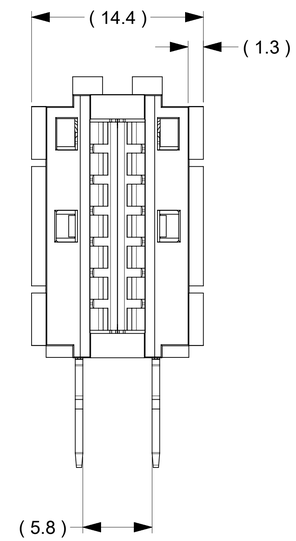


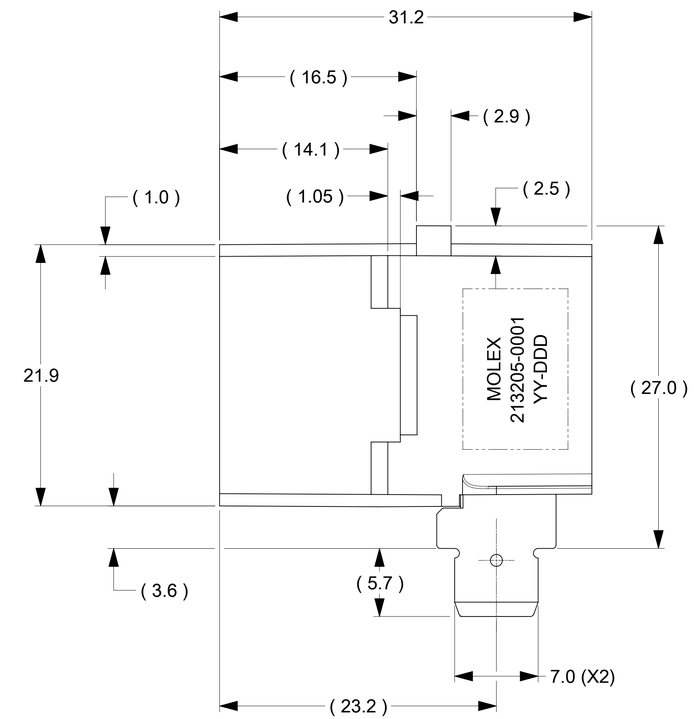


NOTES:
1. MATERIALS:
   a.HOUSING BODY: POLYMER. UL94V-0; BLACK.
   b.TERMINALS: COPPER ALLOY.
   c. RIVET/CLIP: COPPER ALLOY.
2. PLATING:
   a. CONTACT AREAS:
      OPTION 1: 3.18 MICRON MIN. SILVER, OVER 1.27 MICRON MIN. NICKEL.
      OPTION 2: 2.50 MICRON MIN. MATTE TIN OV34 1.27 MICRON MIN. NICKEL
   b. TAB AREAS:3.18 MICRON MIN. TIN OVER 1.27 MICRON MIN. NICKEL.
   c. REST: 1.27 MICRON MIN. NICKEL.
3. LUBRICATION: LUBED IN CONTACT AREA.
4. REFERENCE DOCUMENT:
   a. SILVER VERSION: 2131910001-PS, 2131910001-AS.
   b. TIN VERSION: 2131910002-PS, 2131910001-AS.
5. MODULE ASSEMBLY IS RoHS COMPLIANT.
6. FINAL ASSEMBLY TO BE PACKAGED AND LABELED PER PACKAGING DRAWING NUMBER 2132050001-PK.
7. MATED BUSBAR SHOULD BE PLATED WITH SILVER OVER NICKEL FOR SILVER VERSION CONNECTOR AND TIN OVER NICKEL FOR TIN VERSION CONNECTOR.

| DOCUMENT STATUS | P1 | RELEASE DATE | 2024/05/09 15:44:38 |
|---|---|---|---|

SYMBOLS: = 0 (EA, EC, EP, S, C, ☒, ■, ▽)

THIS DRAWING CONTAINS INFORMATION THAT IS PROPRIETARY TO MOLEX ELECTRONIC TECHNOLOGIES, LLC AND SHOULD NOT BE USED WITHOUT WRITTEN PERMISSION

| DIMENSION UNITS | SCALE |
|---|---|
| mm | 5:1 |

GENERAL TOLERANCES (UNLESS SPECIFIED)

| | | |
|---|---|---|
| ANGULAR TOL | ± | ° |
| 4 PLACES | ± | |
| 3 PLACES | ± | |
| 2 PLACES | ± | 0.15 |
| 1 PLACE | ± | 0.25 |
| 0 PLACES | ± | |

DRAFT WHERE APPLICABLE MUST REMAIN WITHIN DIMENSIONS

CURRENT REV DESC:

| | | |
|---|---|---|
| EC NO: | 785440 | |
| DRWN: | JOEJ3 | 2024/04/30 |
| CHK'D: | JAYK1 | 2024/05/09 |
| APPR: | JAYK1 | 2024/05/09 |

INITIAL REVISION:

| | | |
|---|---|---|
| DRWN: | TOMLU | 2020/02/08 |
| APPR: | BPISZCZOR | 2021/03/23 |

THIRD ANGLE PROJECTION | DRAWING: D-SIZE | SERIES: 213205

molex

POWER PLANE BBC 7C RIGHT ANGLE-TH

PRODUCT CUSTOMER DRAWING

| DOCUMENT NUMBER | DOC TYPE | DOC PART | REVISION |
|---|---|---|---|
| 2132050001-SD | PSD | 000 | B1 |

| MATERIAL NUMBER | CUSTOMER | SHEET NUMBER |
|---|---|---|
| 2132050001 | | 1 OF 1 |