MATERIAL NO. LOOSE PIECE	ENGINEERING P/N LOOSE	MATERIAL NO. TAPE MOUNTED	ENGINEERING P/N TAPED	STUD SIZE	"S" ±.005/0.13	"W" MAX.	"C" MIN.	"L" MAX.	"H" ±.02 /0.5
191930303	G-375-10	-	G-375-10T	10	.198/5.03	.645/16.38	.703/17.86	1.583/40.21	.43/10.9
191930305	G-375-14	-	G-375-14T	1/4"	.265/6.73	.645/16.38	.703/17.86	1.583/40.21	.43/10.9
191930309	G-375-56	-	G-375-56T	5/16"	.328/8.33	.645/16.38	.703/17.86	1.583/40.21	.43/10.9
191930307	G-375-38	-	G-375-38T	3/8"	.390/9.91	.645/16.38	.703/17.86	1.583/40.21	.43/10.9
191930297	G-374-14	-	-	1/4"	.265/6.73	.879/22.33	.703/17.86	1.700/43.18	-
191930299	G-374-56	-	-	5/16"	.328/8.33	.879/22.33	.703/17.86	1.700/43.18	-
191930298	G-374-38	-	-	3/8"	.390/9.91	.879/22.33	.703/17.86	1.700/43.18	-
191930302	G-374-76	-	G-374-76T	7/16"	.453/11.51	.879/22.33	.703/17.86	1.700/43.18	.31/7.9
191930296	G-374-12	-	G-374-12T	1/2"	.515/13.08	.879/22.33	.703/17.86	1.700/43.18	.31/7.9
191930301	G-374-58	-	G-374-58T	5/8"	.656/16.66	.879/22.33	.703/17.86	1.700/43.18	.31/7.9

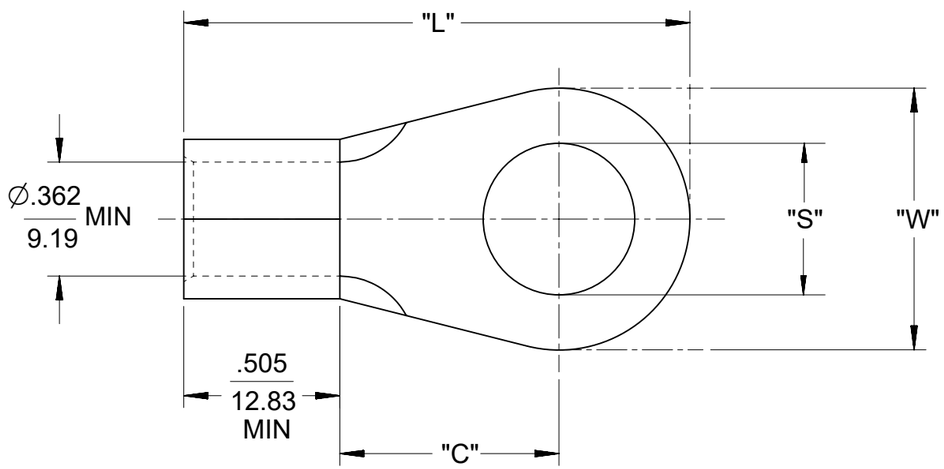

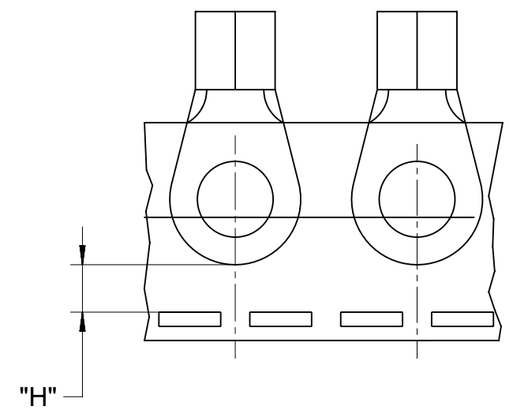

PARTS ON TAPE

SALES DRAWING

REDRAWN FROM SD-19193-007, -028, -029, -030
DRAWN BY DLM 07/2003

NOTES:

1. MATERIAL: MATTE-TIN PLATED COPPER
2. WIRE SIZE: 2 AWG/ 26.6-42.4 mm^2
3. PARTS ARE ROHS COMPLIANT.

THIS DRAWING CONTAINS INFORMATION THAT IS PROPRIETARY TO MOLEX ELECTRONIC TECHNOLOGIES, LLC AND SHOULD NOT BE USED WITHOUT WRITTEN PERMISSION

DIMENSION UNITS	SCALE
INCH/MM	NTS

GENERAL TOLERANCES (UNLESS SPECIFIED)

	MM	INCH
4 PLACES	±	±
3 PLACES	±	± 0.005
2 PLACES	± 0.13	± 0.01
1 PLACE	± 0.25	± 0.02
0 PLACES	±	±
ANGULAR TOL	± °	

DRAFT WHERE APPLICABLE MUST REMAIN WITHIN DIMENSIONS

CURRENT REV DESC: REMOVED OBSOLETED PART NUMBERS AS PER PCN#514357

EC NO: 800942
DRWN: ANIKES1 2024/10/15
CHK'D: GGA 2024/10/30
APPR: GGA 2024/10/30

INITIAL REVISION:
DRWN: ETHRODAHL 2011/05/05
APPR: JMACNEIL 2011/06/03

THIRD ANGLE PROJECTION

molex

RING TONGUE TERMINAL
VERSAKRIMP, 2 AWG

PRODUCT CUSTOMER DRAWING

DOCUMENT NUMBER	DOC TYPE	DOC PART	REVISION
SD-19193-038	PSD	001	D4

DRAWING	SERIES	MATERIAL NUMBER	CUSTOMER	SHEET NUMBER
B-SIZE	19193	SEE TABLE	GENERAL MARKET	1 OF 1

DOCUMENT STATUS	P1	RELEASE DATE	2024/10/30 05:48:56

FORMAT: Eng-lega-master-tb-prod-B
REVISION: E1
DATE: 2021/05/01