MATERIAL NUMBER	ENGINEERING NUMBER	STUD SIZE	"S"	PACKAGING
191930206	E-357-08	8	.173/(4.39)	LOOSE PIECE
191930209	E-357-10	10	.198/(5.02)	
191930212	E-357-14	1/4	.265/(6.73)	
191930219	E-357-56	5/16	.328/(8.33)	
191930216	E-357-38	3/8	.390/(9.90)	
191930223	E-357-76	7/16	.453/(11.50)	
191930208	E-357-08T	8	.173/(4.39)	TAPE MOUNTED
191930215	E-357-14T	1/4	.265/(6.73)	
191930222	E-357-56T	5/16	.328/(8.33)	
191930218	E-357-38T	3/8	.390/(9.90)	
191930224	E-357-76T	7/16	.453/(11.50)	

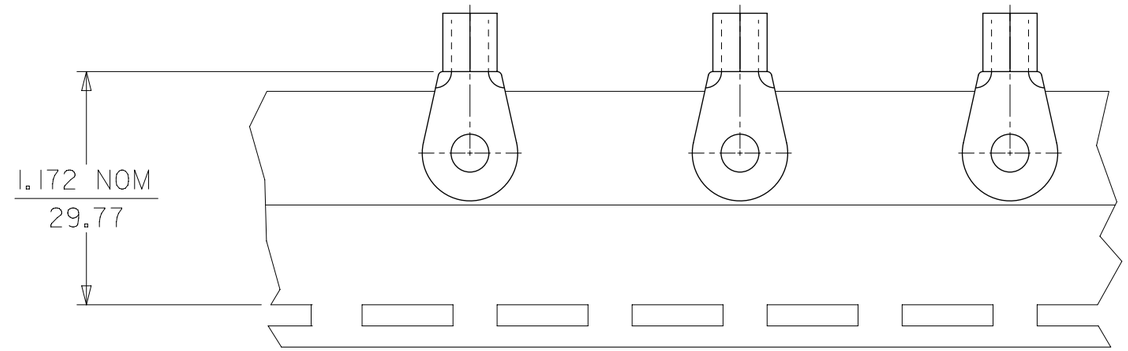

PARTS ON TAPE
DOUBLE SPACED AS SHOWN

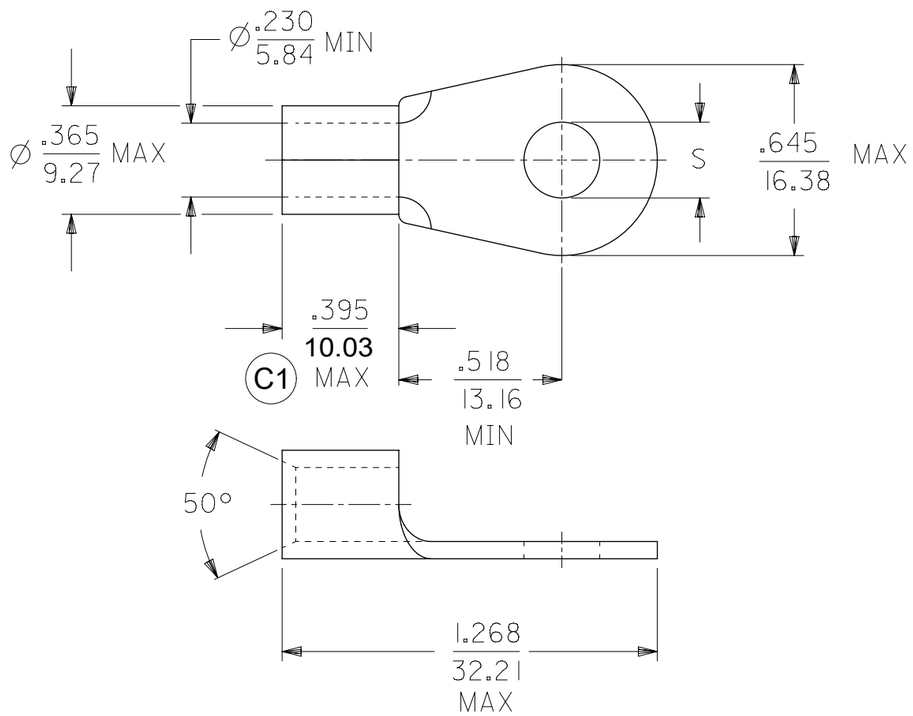

SALES DRAWING

NOTE(S):
1. MATERIAL: COPPER .050/(1.27) THICK
2. PLATING: ELECTROPLATE TIN
3. ALL DIMENSIONS IN INCHES/(MM).
4. WIRE SIZE: 6 AWG
16 MM^2
5. PART IS ROHS COMPLIANT.

THIS DRAWING CONTAINS INFORMATION THAT IS PROPRIETARY TO MOLEX ELECTRONIC TECHNOLOGIES, LLC AND SHOULD NOT BE USED WITHOUT WRITTEN PERMISSION

DIMENSION UNITS	SCALE
INCH/MM	NTS

GENERAL TOLERANCES (UNLESS SPECIFIED)

	MM	INCH
4 PLACES	±	±
3 PLACES	±	± 0.005
2 PLACES	± 0.13	± 0.01
1 PLACE	± 0.25	±
0 PLACES	±	±
ANGULAR TOL	± 0.5 °	

DRAFT WHERE APPLICABLE MUST REMAIN WITHIN DIMENSIONS

CURRENT REV DESC: CORRECTED MM CONVERSION, WAS .395/9.65

EC NO: 739179
DRWN: DEANNM1 2023/02/17
CHK'D: JMACNEIL 2023/02/17
APPR: JMACNEIL 2023/02/17

INITIAL REVISION:
DRWN: EDB 2000/11/01
APPR: RWD 2000/11/01

THIRD ANGLE PROJECTION | DRAWING: B-SIZE | SERIES: 19193

molex

RING TONGUE TERMINAL
VERSAKRIMP 6 AWG

PRODUCT CUSTOMER DRAWING

DOCUMENT NUMBER	DOC TYPE	DOC PART	REVISION
SD-19193-015	PSD	001	C1

MATERIAL NUMBER	CUSTOMER	SHEET NUMBER
SEE TABLE	GENERAL MARKET	1 OF 1

DOCUMENT STATUS	P1	RELEASE DATE	2023/02/17 19:19:10

FORMAT: Eng-lega-master-tb-prod-B
REVISION: E
DATE: 2020/01/14