MAT'L NO	ENG NO	WIRE GAGE	COLOR	∅"ID" MIN	MWID	"A" MIN	"L" REF
191640019	SAMCT-2	22-18	RED	.054 (1.37)	.235 (5.97)	.45 (11.4)	1.45 (36.8)
191640084	SMCT-2	16-14	BLUE	.082 (2.08)			
191640078	SCMCT-2	12-10	YELLOW	.144 (3.66)	.310 (7.62)	.45 (11.4)	1.49 (37.8)

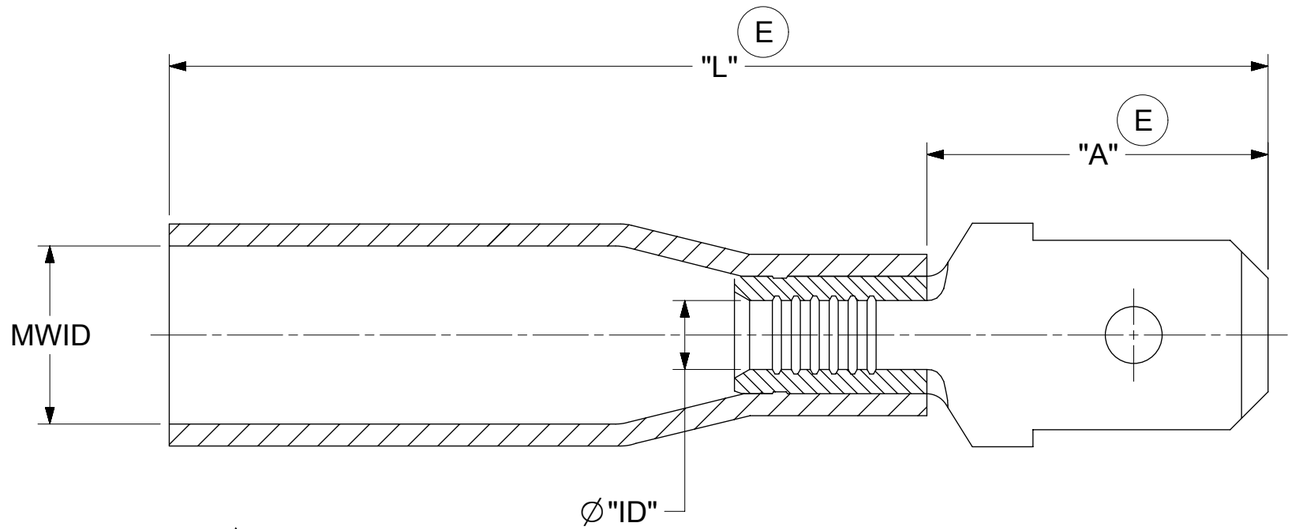

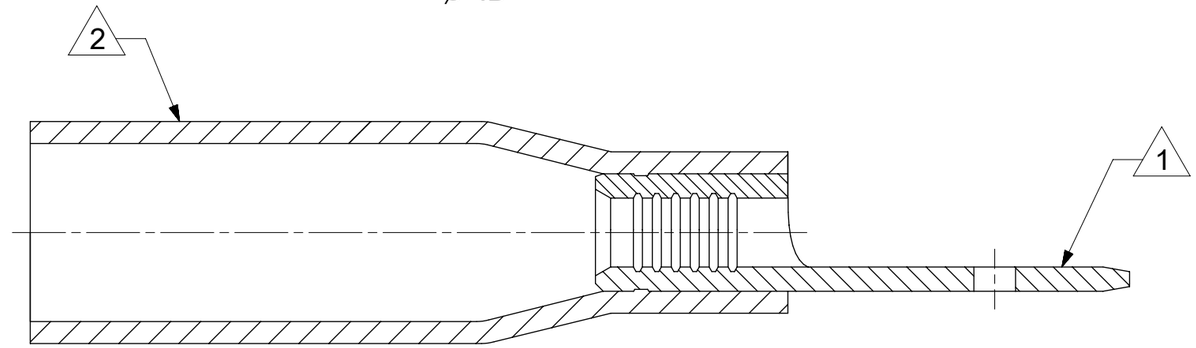

NOTES:

1. TERMINAL: ZINC CHROMATE PLATED BRASS.
2. INSULATION: HEAT SHRINKABLE TUBING WITH HOTMELT ADHESIVE INNER LINER. COLOR : SEE CHART
3. MWID = MAXIMUM WIRE INSULATION DIAMETER.
4. MUST BE RoHS COMPLIANT.

DOCUMENT STATUS	P1	RELEASE DATE	2024/10/11 16:17:43

FORMAT: Eng-lega-master-tb-prod-B
REVISION: E1
DATE: 2021/05/01

FUNCTIONAL SYMBOLS: E/A = 0; E/C = 0; E/P = 0

DIVISIONAL SYMBOLS

THIS DRAWING CONTAINS INFORMATION THAT IS PROPRIETARY TO MOLEX ELECTRONIC TECHNOLOGIES, LLC AND SHOULD NOT BE USED WITHOUT WRITTEN PERMISSION

DIMENSION UNITS: INCH/MM
SCALE: NTS

GENERAL TOLERANCES (UNLESS SPECIFIED)

	MM	INCH
4 PLACES	±	±
3 PLACES	±	± 0.005
2 PLACES	± 0.13	± 0.01
1 PLACE	± 0.25	±
0 PLACES	±	±
ANGULAR TOL	± °	

DRAFT WHERE APPLICABLE MUST REMAIN WITHIN DIMENSIONS

CURRENT REV DESC: REDRAWN TO NX, CHARTED DIMS

EC NO: 800326
DRWN: DEANNM1 2024/10/01
CHK'D: ETHRODAHL 2024/10/11
APPR: ETHRODAHL 2024/10/11

INITIAL REVISION:
DRWN: BENDERLE 2003/02/18
APPR: RDEROSS 2003/02/19

THIRD ANGLE PROJECTION
DRAWING: B-SIZE
SERIES: 19164

molex

PERMA-SEAL QD MALE TERMINAL LONG BARREL

PRODUCT CUSTOMER DRAWING

DOCUMENT NUMBER	DOC TYPE	DOC PART	REVISION
SD-19164-049	PSD	001	E

MATERIAL NUMBER	CUSTOMER	SHEET NUMBER
	GENERAL MARKET	1 OF 1