LOOSE PIECE		METAL STRIP CARRIED		MYLAR TAPE CARRIED		FEATURES			DIMENSIONS						
MATERIAL NUMBER	ENGINEERING NUMBER	MATERIAL NUMBER	ENGINEERING NUMBER	MATERIAL NUMBER	ENGINEERING NUMBER	AWG	COLOR	FITS TAB SIZE	MWID	L ± .015/0.38	G ± .015/0.38	E ± .015/0.38	C ± .015/0.38	D ± .015/0.38	H ± .02/0.5
190070001	AA-2220	190070008	AA-2220Z	190070004	AA-2220T	22-18	RED	.250x.032/6.35x0.81	.176/4.47	.630/16.00	.585/14.86	.512/13.00	.236/5.99	.197/5.00	.93/23.6
190070021	BB-2221	190070028	BB-2221Z	190070024	BB-2221T	16-14	BLUE	.250x.032/6.35x0.81	.200/5.08	.630/16.00	.585/14.86	.500/12.70	.260/6.60	.197/5.00	.93/23.6
190070040	C-2211	190070041	C-2211Z	190070053	C-2211T	12-10	YELLOW	.250x.032/6.35x0.81	.260/6.60	.667/16.93	.677/17.20	.511/12.98	.311/7.90	.246/6.25	.97/24.6

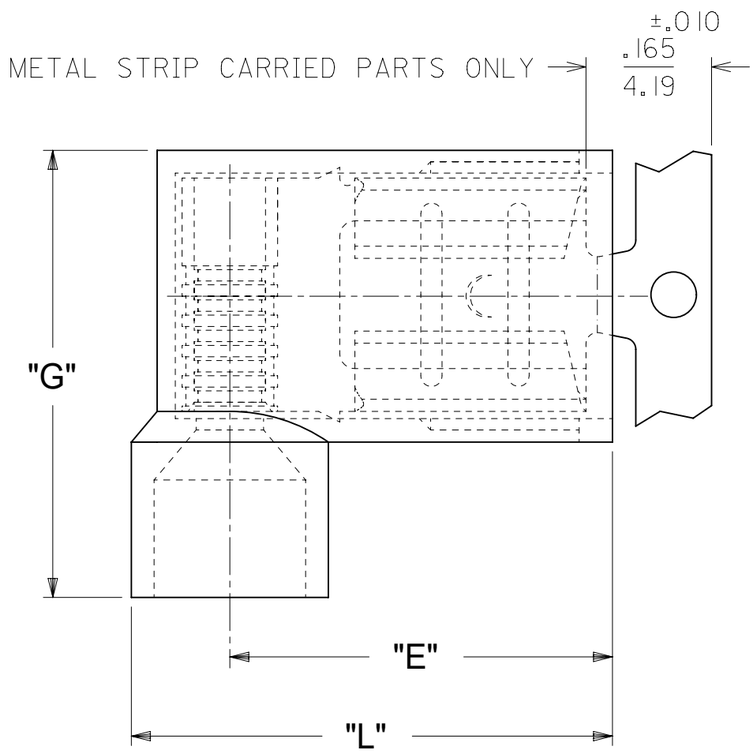

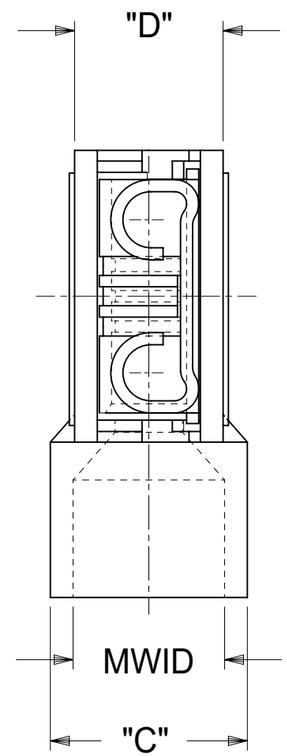

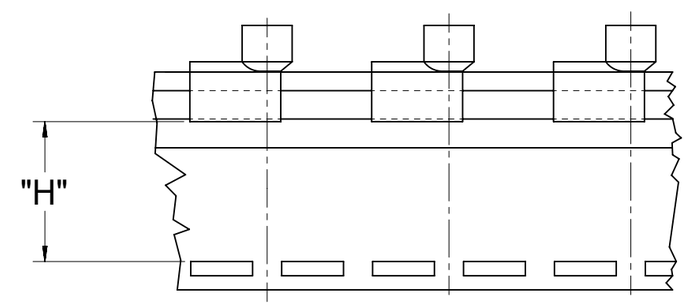

PARTS ON TAPE

D1

NOTE(S):
1. MWID = MAX. WIRE INSULATION DIA.
2. MATERIAL:
   HOUSING: NYLON
   TERMINAL: TIN-PLATED BRASS
3. ASEMBLY IS RoHS COMPLIANT.

THIS DRAWING CONTAINS INFORMATION THAT IS PROPRIETARY TO MOLEX ELECTRONIC TECHNOLOGIES, LLC AND SHOULD NOT BE USED WITHOUT WRITTEN PERMISSION

DIMENSION UNITS	SCALE
INCH/MM	5:1

GENERAL TOLERANCES (UNLESS SPECIFIED)

	MM	INCH
4 PLACES	±	±
3 PLACES	±	± 0.005
2 PLACES	± 0.13	± 0.01
1 PLACE	± 0.25	±
0 PLACES	±	±
ANGULAR TOL	± 0.5 °	

DRAFT WHERE APPLICABLE MUST REMAIN WITHIN DIMENSIONS

CURRENT REV DESC: REMOVE STOP SIGN INFO "PRE-RELEASE REFERENCE USE ONLY"

EC NO: 692915
DRWN: DMYRICK 2022/01/20
CHK'D: JMACNEIL 2022/01/21
APPR: JMACNEIL 2022/01/21

INITIAL REVISION:
DRWN: EHILE 2006/12/15
APPR: JMACNEIL 2006/12/15

molex

FLAG QUICK DISCONNECT, FULLY INSULATED, .250 X .032 TAB SIZE

PRODUCT CUSTOMER DRAWING

DOCUMENT NUMBER	DOC TYPE	DOC PART	REVISION
SD-19007-004	PSD	001	D1

THIRD ANGLE PROJECTION	DRAWING	SERIES	MATERIAL NUMBER	CUSTOMER	SHEET NUMBER
	B-SIZE	19007	SEE TABLE	GENERAL MARKET	1 OF 1

DOCUMENT STATUS	P1	RELEASE DATE	2022/01/21 17:18:54

FORMAT: Eng-lega-master-tb-prod-B
REVISION: E1
DATE: 2021/05/01