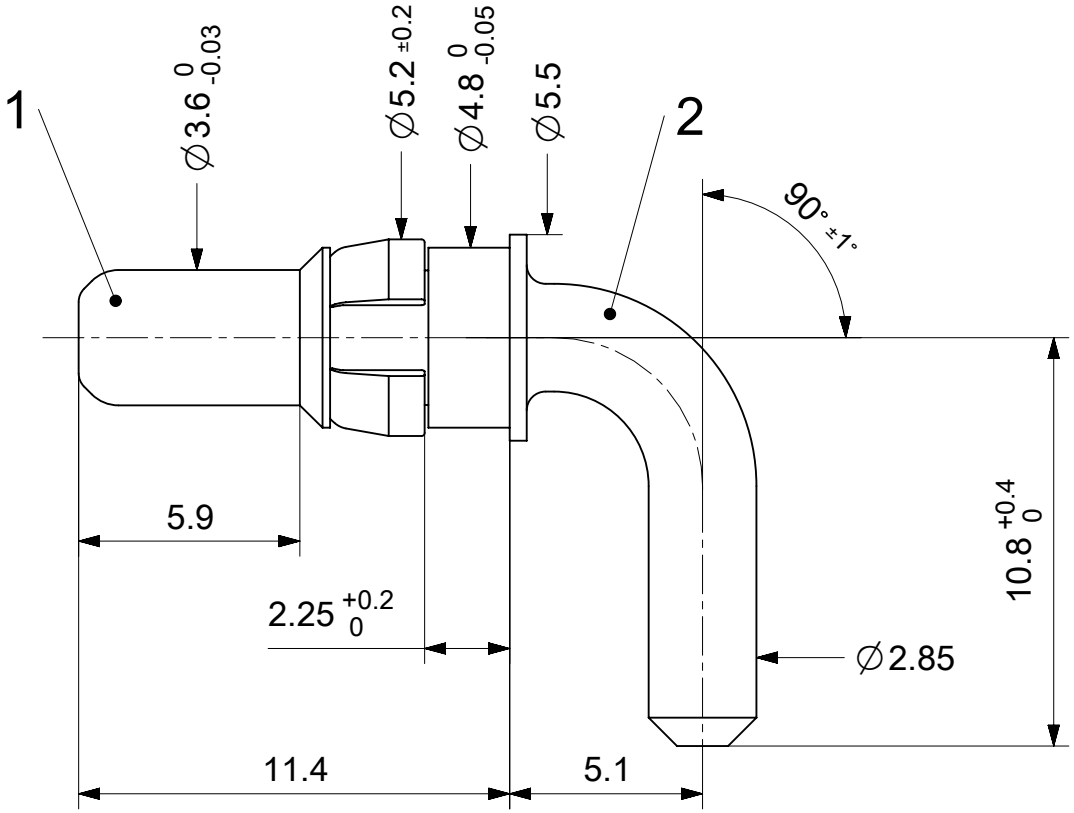

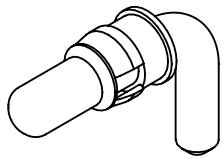

2:1

RoHS compliant
by exemption

1731121236	FMP235P104	104
Material Number	FCT Part Number	Material + Finish See extra sheet

UNLESS OTHERWISE SPECIFIED DIMENSIONS FOR REFERENCE ONLY

REPLACEMENT FOR DOCUMENT NUMBER: FMP235P

FUNCTIONAL SYMBOLS
FA = 0
FC = 0
FP = 0

DIVISIONAL SYMBOLS

THIS DRAWING CONTAINS INFORMATION THAT IS PROPRIETARY TO MOLEX ELECTRONIC TECHNOLOGIES, LLC AND SHOULD NOT BE USED WITHOUT WRITTEN PERMISSION

DIMENSION UNITS	SCALE
mm	5:1

GENERAL TOLERANCES (UNLESS SPECIFIED)	
ANGULAR TOL	± °
4 PLACES	±
3 PLACES	±
2 PLACES	±
1 PLACE	±
0 PLACES	±

DRAFT WHERE APPLICABLE MUST REMAIN WITHIN DIMENSIONS

CURRENT REV DESC:

EC NO: 686704
DRWN: VLOKESHA 2021/04/09
CHK'D: MTEUBEL 2021/12/02
APPR: MTEUBEL 2021/12/02

INITIAL REVISION:
DRWN: VLOKESHA 2021/04/09
APPR: MTEUBEL 2021/12/02

molex

FCT 40A HIGH POWER CONTACT
FOR D-SUB

PRODUCT CUSTOMER DRAWING

DOCUMENT NUMBER	DOC TYPE	DOC PART	REVISION
1731121236	PSD	000	A

FIRST ANGLE PROJECTION	DRAWING	SERIES	MATERIAL NUMBER	CUSTOMER	SHEET NUMBER
	A4-SIZE	173112	SEE TABLE	GENERAL MARKET	1 OF 1

DOCUMENT STATUS	P1	RELEASE DATE	2021/12/02 10:15:24

FORMAT: master-tb-prod-A4
REVISION: J
DATE: 2020/01/14