COMMENT:
ALL RIGHTS ARE RESERVED BY US FOR THIS DRAWING. WITHOUT OUR PRIOR CONSENT,
IT MAY NEITHER BE DUBLICATED NOR MADE AVAILABLE TO A THIRD PARTY,
AND IT ALSO MAY NOT BE IMPROPERLY USED BY TE RECEIVER, OR A THIRD PARTY.

RoHS compliant
by exemption

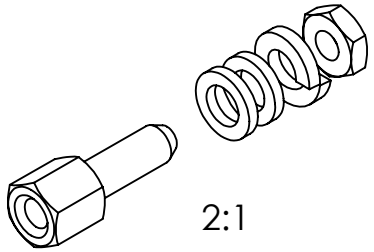

2:1

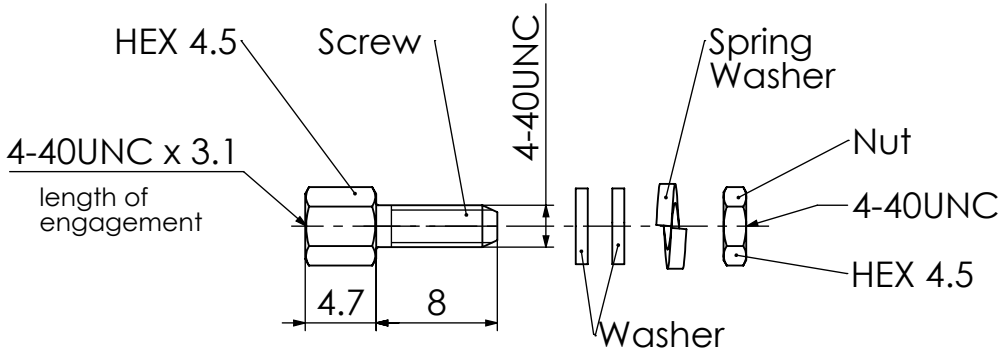

Material Number	FCT Part Number	Material	Surface	Screw (pc.)	Washer (pc.)	Spring Washer (pc.)	Nut (pc.)
1731121079	F62M031S253+S	Steel (Lead free) 2)	zinc plated 1)	1	-	-	-
1731120654	F62M031S245+S		tin plated	1	-	-	-
1731120593	F-GSCH1/5-K1074		zinc plated 1)	1	1	1	1
1731121184	F-GSCH1/5-K660		zinc plated 1)	1	-	1	-
1731120291	F-GSCH1/5-K320SN		tin plated	1	-	-	-
1731121042	F-GSCH1/5-K320		zinc plated 1)	1	-	-	-
1731121006	F-GSCH1/5S		zinc plated 1)	1	2	1	1
1731120014	F-GSCH1/5		zinc plated 1)	1	2	1	1
1731120416	F-GSCH1/5SSN	Steel	tin plated	1	2	1	1
1727040093	F-GSCH1/5SN		tin plated	1	2	1	1

Generally twice a material number respectively FCT part number is needed per connector.

Packaging specification: 1731120003-PK

1) With tension control fluid

2) RoHS complaint

FUNCTIONAL SYMBOLS
F_V = 0
F_C = 0
F_P = 0

THIS DRAWING CONTAINS INFORMATION THAT IS PROPRIETARY TO MOLEX ELECTRONIC TECHNOLOGIES, LLC AND SHOULD NOT BE USED WITHOUT WRITTEN PERMISSION

DIMENSION UNITS	SCALE
mm	2:1

MEASUREMENTS WITHOUT TOLERANCE ACC. TO
ISO 2768-mK

REV.	CH.-NO.
4	24410 / 24420
3	22599
2	2 1262
1	

CURRENT REVISION
DRWN: DRAWN BY mteubel 28-05-2025
APPR: APPR BY mteubel 04-06-2025

INITIAL REVISION
DRWN: DRAWN BY Denzinger 16-04-2003
APPR: APPR BY Floßmann 16-04-2003

molex

FCT Female Screw Lock
F-GSCH1/5-K1074 /-K660 /-K320

PRODUCT CUSTOMER DRAWING

MATERIAL NUMBER	REVISION
see table	4

REPLACEMENT FOR:	FIRST ANGLE PROJECTION	DRAWING	DOCUMENT NUMBER	CUSTOMER	SHEET NUMBER
1731120014_Rev.A1		A4-SIZE	F62M031_D	GENERAL MARKET	1 OF 1