MATERIAL NO.	ENGINEERING NO.	FINISH	MATERIAL
1302011228	55-0496	CLEAR ANODIZE	ALUMINUM
1302011229	55-0496SS	PASSIVATED	ST. STEEL

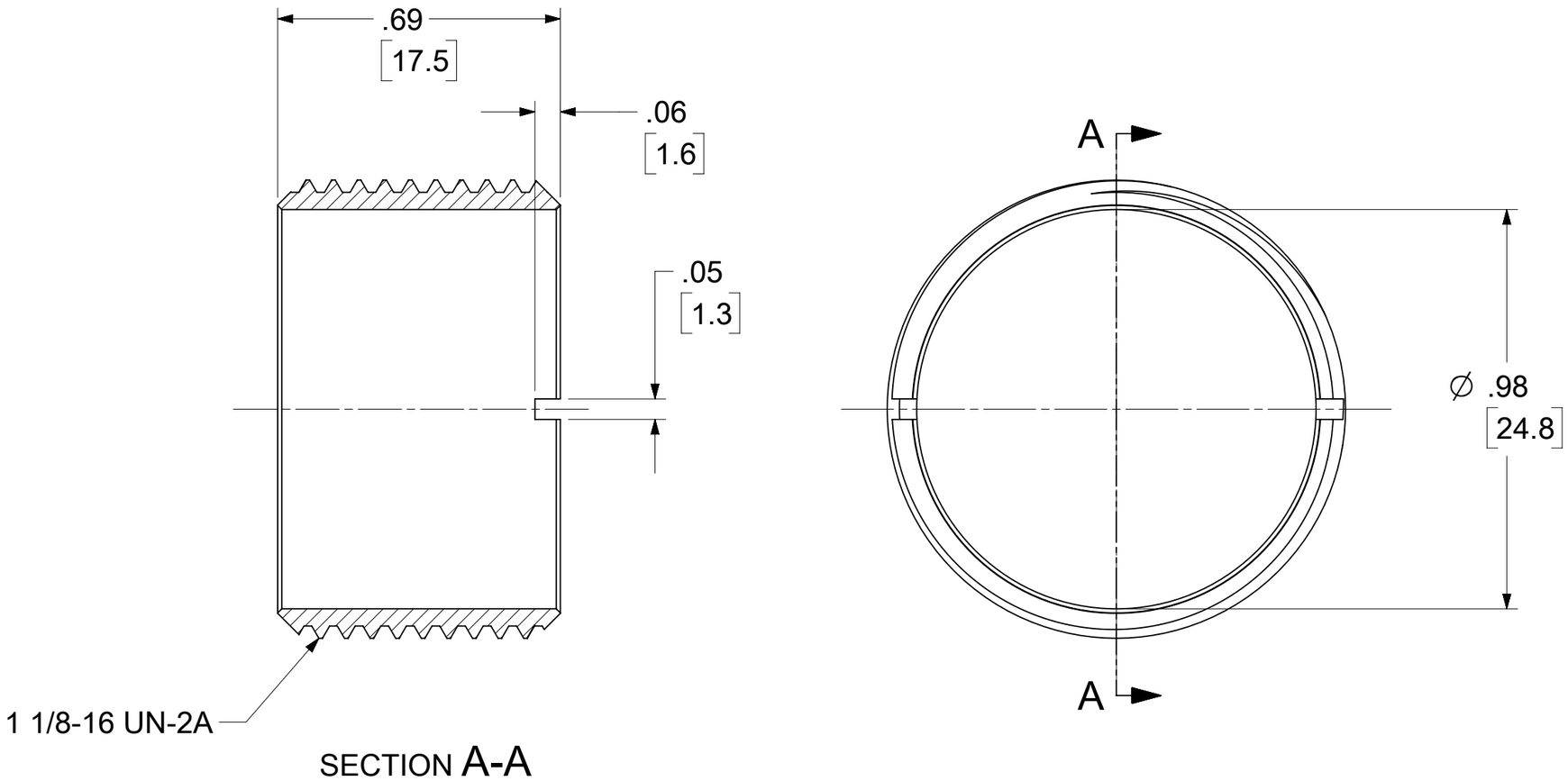

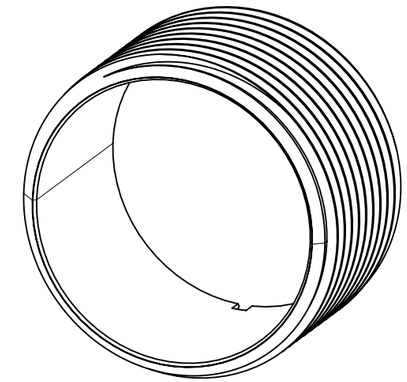

SCALE 2:1

NOTE: C
ALL DIMENSIONS ARE FOR REFERNCE UNLESS TOLERANCED OR OTHERWISE NOTED

FUNCTIONAL SYMBOLS	
EA	= 0
EC	= 0
EP	= 0
DIVISIONAL SYMBOLS	

THIS DRAWING CONTAINS INFORMATION THAT IS PROPRIETARY TO MOLEX ELECTRONIC TECHNOLOGIES, LLC AND SHOULD NOT BE USED WITHOUT WRITTEN PERMISSION

DIMENSION UNITS	SCALE
INCH/MM	2:1

GENERAL TOLERANCES (UNLESS SPECIFIED)

	MM	INCH
4 PLACES	±	±
3 PLACES	±	±
2 PLACES	±	±
1 PLACE	±	±
0 PLACES	±	±
ANGULAR TOL	± °	

DRAFT WHERE APPLICABLE MUST REMAIN WITHIN DIMENSIONS

CURRENT REV DESC: NOTE ADDED

EC NO: 701162
DRWN: AKABADI 2022/01/13
CHK'D: RSTONE 2022/03/30
APPR: BWOODMAN 2022/04/08

INITIAL REVISION:
DRWN: BRUPERT 2009/08/24
APPR: JFMURPHY 2009/08/27

molex

MINI-CHANGE THREADED ADAPTER
C-SIZE, 1-1/8 THD

PRODUCT CUSTOMER DRAWING

DOCUMENT NUMBER	DOC TYPE	DOC PART	REVISION
SD-130201-228	PSD	001	C

THIRD ANGLE PROJECTION	DRAWING	SERIES	MATERIAL NUMBER	CUSTOMER	SHEET NUMBER
	B-SIZE	130201	SEE TABLE	GENERAL MARKET	1 OF 1

DOCUMENT STATUS	P1	RELEASE DATE	2022/04/08 14:05:57

FORMAT: Eng-lega-master-tb-prod-B
REVISION: E1
DATE: 2021/05/01