PART NO	ENGINEERING NO.	FINISHED LENGTH
1300660029	1R3000A28A060G	6IN [0.5 FT]
1300660038	1R3000A28M020G	2M [6 FT 7 IN]
1300660301	1R3000A28M060G	6M [19 FT 2 IN]

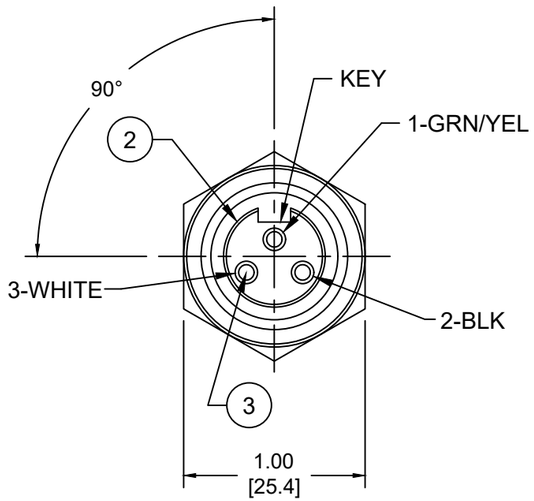

FEMALE-FACE VIEW

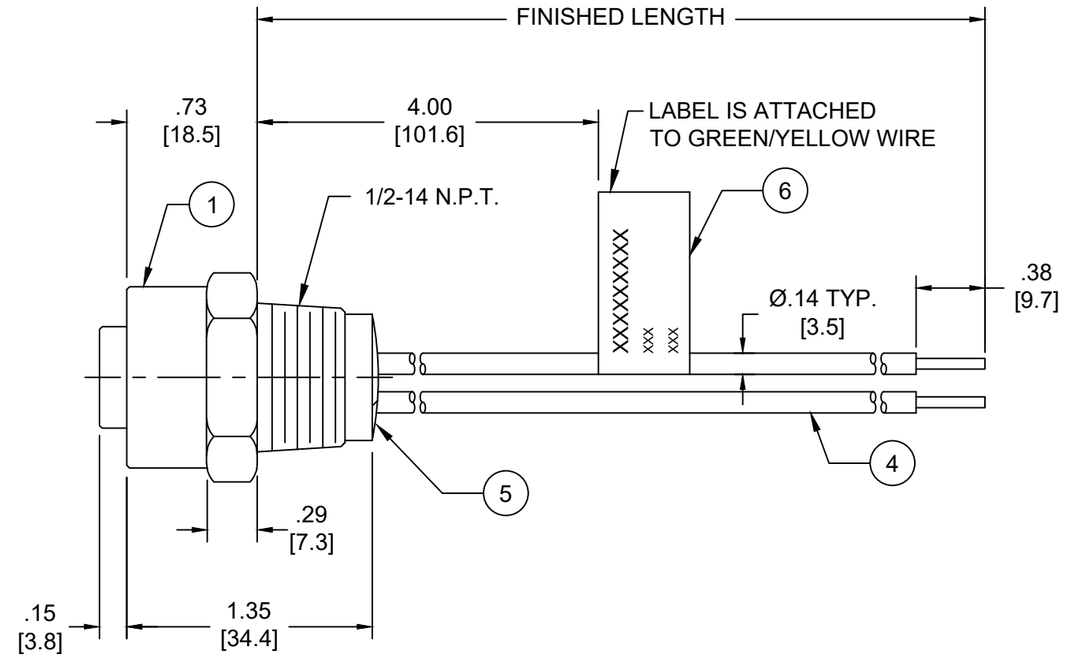

NOTES:

1. MATERIAL: AS NOTED
2. FINISH: AS NOTED
3. ELECTRICAL:
   VOLTAGE: 500V PER IEC60664
   600V PER UL2237
   CURRENT: 20A (C1)
4. TEMP RATING: -20°TO +105°C
5. PROTECTION: IP67 (WHEN MATED)
6. COUPLING THREAD: 7/8-16UN
7. UL LISTED FILE: E258922
8. ALL DIMENSIONS ARE FOR REFERENCE
   UNLESS TOLERANCED OR NOTED OTHERWISE

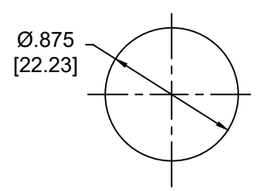

REF. KNOCKOUT HOLE

PART NO. MATRIX

1R3000A28M060G

FINISHED LENGTH:
A060= 6 IN.
F020= 2 FEET
M005= 0.5 METER
M010= 1 METER
M100= 10 METER

CABLE LENGTH TOLERANCES
<.3M [1FT]: +19mm-0 [+.75in-0]
.3 - .9M [1 - 3FT]: +44.5mm-0 [+1.75in-0]
.9 - 1.8M [3 - 6FT]: +55.6mm-0 [+2.19in-0]
1.8 - 3.7M [6 - 12FT: +88.9mm-0 [+3.50in-0]
3.7 - 7.3M [12 - 24FT]: +165.1mm-0 [+6.50in-0]
7.3-14.6M [24 - 48FT]: +317.5mm-0 [+12.50in-0]
14.6 - 30.5M [48-100FT]: +622.3mm-0 [+24.50in-0]
OVER 30M [100FT] +2% OF FINISHED LENGTH

ITEM	DESCRIPTION	MATERIAL	FINISH
6	FLAG LABEL	VINYL	BLACK/YELLOW
5	POTTING MATERIAL	EPOXY	BLACK
4	WIRE, 14 AWG (UL1015)	PVC INSULATION	SEE FACE VIEW
3	CONTACT SOCKET	COPPER ALLOY	GOLD PLATED
2	FEMALE INSERT	TPE	BLACK
1	RECEPTACLE SHELL	ZINC DIE-CAST	NICKEL PLATED

DOCUMENT STATUS	P1	RELEASE DATE	2024/10/21 16:43:52

FORMAT: IN-ACAD-tb-prod-B
REVISION: B
DATE: 2020/01/14

FUNCTIONAL SYMBOLS: FA=0, FC=0, FP=0
DIVISIONAL SYMBOLS

THIS DRAWING CONTAINS INFORMATION THAT IS PROPRIETARY TO MOLEX ELECTRONIC TECHNOLOGIES, LLC AND SHOULD NOT BE USED WITHOUT WRITTEN PERMISSION

DIMENSION UNITS: INCH/MM
SCALE: NTS

GENERAL TOLERANCES (UNLESS SPECIFIED)

	mm	INCH
4 PLACES	±----	±----
3 PLACES	±----	±----
2 PLACES	±----	±----
1 PLACE	±----	±----
0 PLACES	±----	±----
ANGULAR TOL ±	---- °	

DRAFT WHERE APPLICABLE MUST REMAIN WITHIN DIMENSIONS

CURRENT REV DESC: UPDATED CURRENT TO 20A

EC NO: 794205
DRWN: HENRYB1 2024/08/02
CHK'D: ALEON01 2024/08/02
APPR: BWOODMAN 2024/10/21

INITIAL REVISION:
DRWN: RSTONE 2017/01/11
APPR: BWOODMAN 2017/01/26

molex

BRAD POWER RECEPTACLE A-SIZE
3 POLE, FEMALE, STRAIGHT, SINGLE KEY,
#14 AWG

PRODUCT CUSTOMER DRAWING

DOCUMENT NUMBER	DOC TYPE	DOC PART	REVISION
SD-130066-075	PSD	001	C1

THIRD ANGLE PROJECTION	DRAWING	SERIES	MATERIAL NUMBER	CUSTOMER	SHEET NUMBER
	B-SIZE	130066	SEE CHART	GENERAL MARKET	1 OF 1