PART NUMBER	ENGINEERING NUMBER	FINISH LENGTH
1300660251	1R4000A28M003G8	0.98' [0.3M]
1300660316	1R3000A28M0058G	1.64' [0.5M]
1300130298	1R4000A28M0108	3.28' [1M]

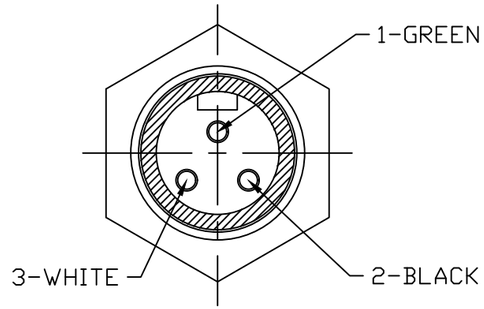

FEMALE FACE VIEW-3P

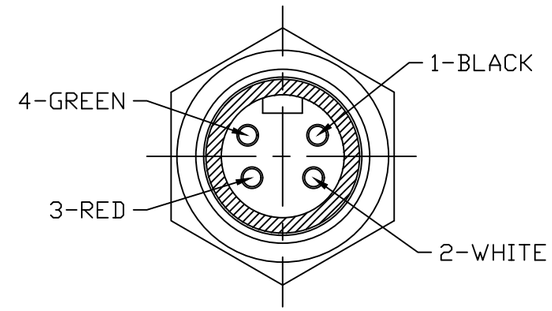

FEMALE FACE VIEW 4P

CABLE LENGTH TOLERANCES
<.3M [1FT]: +19mm-0 [+.75in-0]
.3 - .9M [1 - 3FT]: +44.5mm-0 [+1.75in-0]
.9 - 1.8M [3 - 6FT]: +55.6mm-0 [+2.19in-0]
1.8 - 3.7M [6 - 12FT: +88.9mm-0 [+3.50in-0]
3.7 - 7.3M [12 - 24FT]: +165.1mm-0 [+6.50in-0]
7.3-14.6M [24 - 48FT]: +317.5mm-0 [+12.50in-0]
14.6 - 30.5M [48-100FT]: +622.3mm-0 [+24.50in-0]
OVER 30M [100FT] +2% OF FINISHED LENGTH

PART NUMBER LEGEND

1R4000A28M0108

- SS SHELL
- FINISHED LENGTH:
  M005= 0.5 METER
  M010= 1 METER
  M100= 10 METER

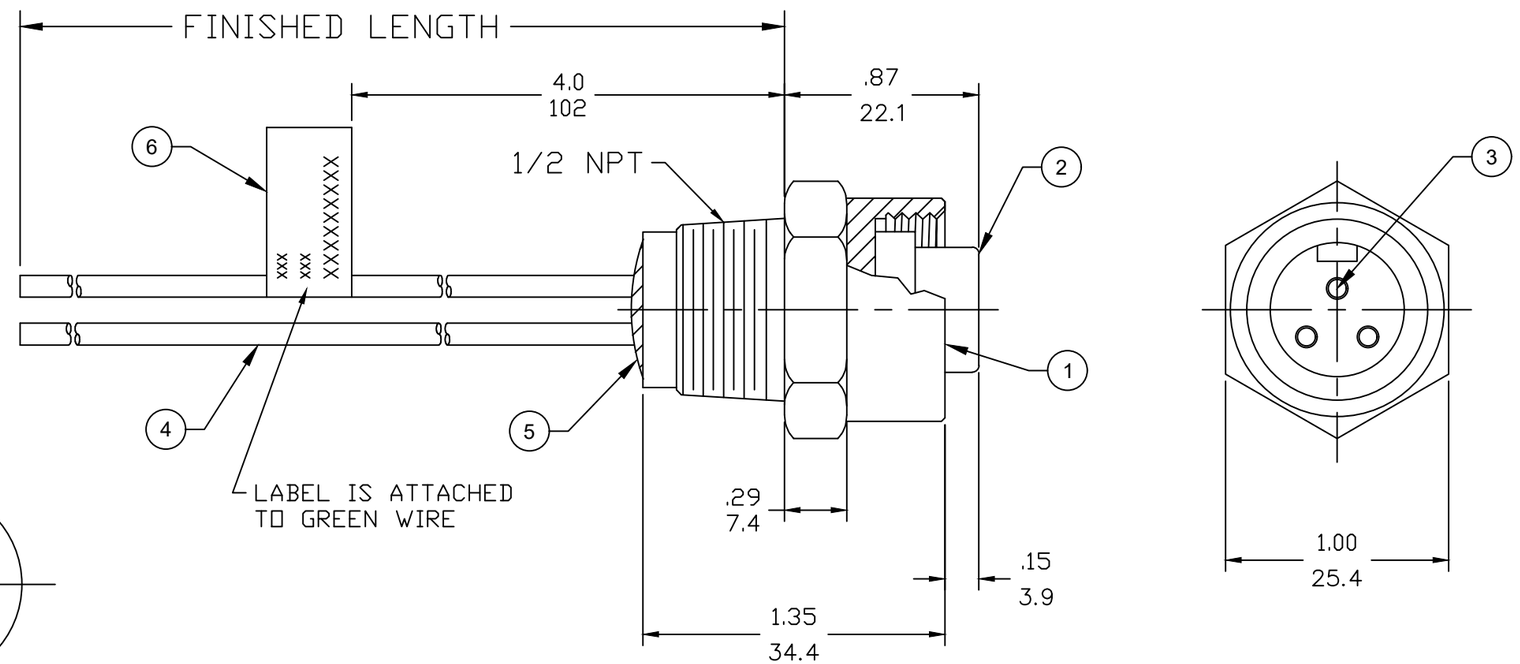

NOTES:
1. MATERIAL: AS NOTED
2. FINISH: AS NOTED
3. ELECTRICAL:
   VOLTAGE: 3P: 500V PER IEC60664
   600V PER UL2237
   4P: 483V PER IEC60664
   600V PER UL2237
   B1 CURRENT: 20A
4. TEMP RATING: -20°TO +90°C
5. PROTECTION: IP67 (WHEN MATED)
6. COUPLING THREAD: 7/8-16UN
7. UL LISTED FILE: E258922
8. ALL DIMS ARE FOR REFERENCE
   UNLESS NOTED OTHERWISE

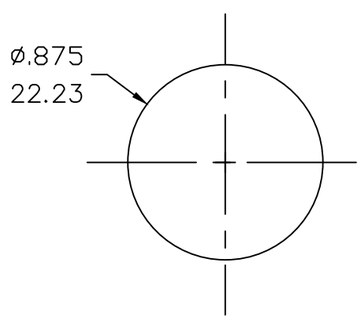

REF. KNOCKOUT HOLE

ITEM	DESCRIPTION	MATERIAL	FINISH
6	FLAG LABEL	VINYL	BLACK/YELLOW
5	POTTING MATERIAL	EPOXY	
4	WIRE, 14 AWG, UL 1015	PVC INSULATION	SEE FACE VIEW
3	CONTACT SOCKET	COPPER ALLOY	GOLD PLATED
2	FEMALE INSERT (A-SIZE)	PVC	YELLOW
1	RECEPTACLE SHELL	ST. STEEL	PASSIVATED

THIS DRAWING CONTAINS INFORMATION THAT IS PROPRIETARY TO MOLEX ELECTRONIC TECHNOLOGIES, LLC AND SHOULD NOT BE USED WITHOUT WRITTEN PERMISSION

FUNCTIONAL SYMBOLS: FA=0, FC=0, FP=0
DIVISIONAL SYMBOLS

DIMENSION UNITS: INCH/MM
SCALE: 1:1

GENERAL TOLERANCES (UNLESS SPECIFIED)

	mm	INCH
4 PLACES	± ----	± ----
3 PLACES	± ----	± ----
2 PLACES	± ----	± ----
1 PLACE	± ----	± ----
0 PLACES	± ----	± ----
ANGULAR TOL	± ---- °	

DRAFT WHERE APPLICABLE MUST REMAIN WITHIN DIMENSIONS

CURRENT REV DESC: UPDATED BORDER. UPDATED CURRENT TO 20A

EC NO: 794205
DRWN: HENRYB1 2024/08/02
CHK'D: ALEON01 2024/08/02
APPR: BWOODMAN 2024/10/21

INITIAL REVISION:
DRWN: RSTONE 2017/09/12
APPR: BWOODMAN 2017/10/04

THIRD ANGLE PROJECTION | DRAWING: B-SIZE | SERIES: 130013

molex

MINI-CHANGE RECEPTACLE
FEMALE, 14 AWG ST. STEEL

PRODUCT CUSTOMER DRAWING

DOCUMENT NUMBER	DOC TYPE	DOC PART	REVISION
SD-130013-122	PSD	001	B1

MATERIAL NUMBER | CUSTOMER: GENERAL MARKET | SHEET NUMBER: 1 OF 1

DOCUMENT STATUS: P1 | RELEASE DATE: 2024/10/21 16:43:50

FORMAT: IN-ACAD-tb-prod-B
REVISION: C
DATE: 2022/10/04