MATERIAL NUMBER	ENGINEERING NUMBER	FINISHED LENGTH
1300610282	103006K20M010E	1M [3FT 3 IN]
1300611104	103006K20M030G	3M [9FT 10 IN]
1300610290	103006K20M650E	65M [213FT 3 IN]

PART NUMBER LEGEND

103006K20M010E

LENGTH
M001 = .1 METER
M010 = 1 METER
M100 = 10 METER

OVERMOLD COLOR
BLANK = GRAY
E = RED
G = BLACK

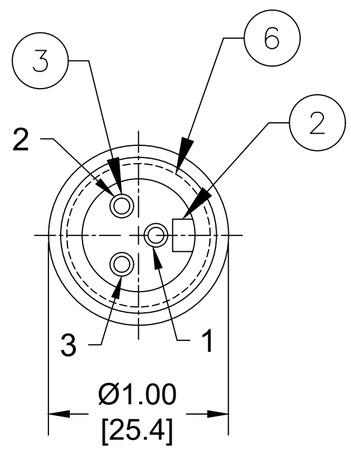

FACE VIEW - MALE

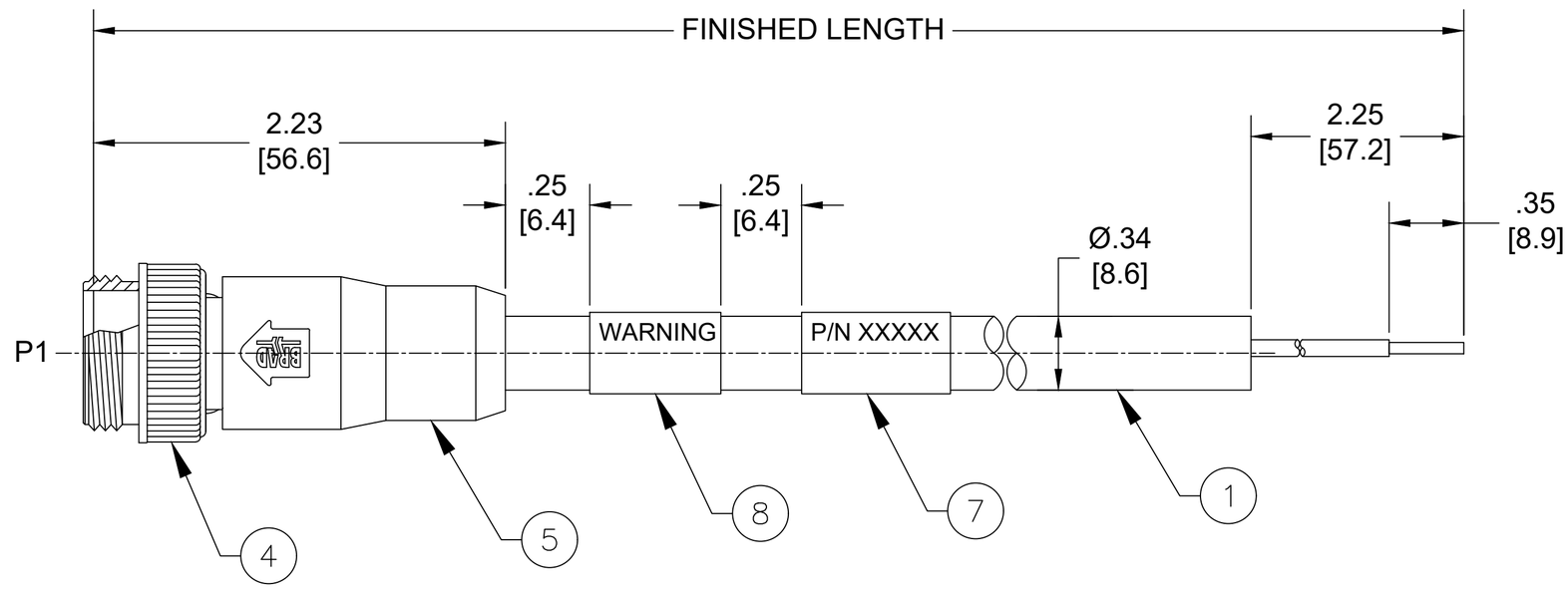

NOTES:
1. MATERIAL: AS NOTED
2. FINISH: AS NOTED
3. ELECTRICAL:
   VOLTAGE: 500V PER IEC60664
   600V PER UL2237
   CURRENT: 20A
4. TEMP RATING: -20°TO +90°C
5. PROTECTION: IP67 (WHEN MATED)
6. COUPLING THREAD: 7/8"-16UN
7. UL LISTED FILE: E258922
8. ALL DIMENSIONS ARE FOR REFERENCE UNLESS TOLERANCED OR NOTED OTHERWISE

D1

P1

1	GREEN-YELLOW
2	BLACK
3	WHITE

WIRE DIAGRAM

CABLE LENGTH TOLERANCES
<.3M [1FT]: +19mm-0 [+.75in-0]
.3 - .9M [1 - 3FT]: +44.5mm-0 [+1.75in-0]
.9 - 1.8M [3 - 6FT]: +55.6mm-0 [+2.19in-0]
1.8 - 3.7M [6 - 12FT: +88.9mm-0 [+3.50in-0]
3.7 - 7.3M [12 - 24FT]: +165.1mm-0 [+6.50in-0]
7.3-14.6M [24 - 48FT]: +317.5mm-0 [+12.50in-0]
14.6 - 30.5M [48-100FT]: +622.3mm-0 [+24.50in-0]
OVER 30M [100FT] +2% OF FINISHED LENGTH

ITEM	DESCRIPTION	MATERIAL	FINISH
8	WARNING LABEL	VINYL	BLACK/ORANGE
7	WRAP LABEL	VINYL	BLACK/YELLOW
6	FRICTION RING	NYLON	WHITE
5	OVERMOLD	TPE	SEE P/N MATRIX
4	COUPLING	ZINC DIE-CAST	BLACK
3	CONTACT PIN	COPPER ALLOY	GOLD OVER NICKEL
2	MALE INSERT	TPE	BLACK
1	CABLE, 14/3 TC-ER	TPE JACKET	BLACK

THIS DRAWING CONTAINS INFORMATION THAT IS PROPRIETARY TO MOLEX ELECTRONIC TECHNOLOGIES, LLC AND SHOULD NOT BE USED WITHOUT WRITTEN PERMISSION

FUNCTIONAL SYMBOLS
FA =0
FC =0
FP =0
DIVISIONAL SYMBOLS

DIMENSION UNITS	SCALE
INCH/MM	NTS

GENERAL TOLERANCES (UNLESS SPECIFIED)

	mm	INCH
4 PLACES	±----	±----
3 PLACES	±----	±----
2 PLACES	±----	±----
1 PLACE	±----	±----
0 PLACES	±----	±----
ANGULAR TOL ± ---- °		

DRAFT WHERE APPLICABLE MUST REMAIN WITHIN DIMENSIONS

CURRENT REV DESC: UPDATED AMPERAGE TO 20A

EC NO: 793947
DRWN: HENRYB1 2024/07/31
CHK'D: LESPINOZA 2024/08/01
APPR: BWOODMAN 2024/08/02

INITIAL REVISION:
DRWN: BARDEN 2014/11/26
APPR: JFMURPHY 2014/12/08

molex

BRAD POWER CORDSET, A-SIZE
3 POLE, MALE, STRAIGHT, SINGLE KEY,
#14AWG

PRODUCT CUSTOMER DRAWING

DOCUMENT NUMBER	DOC TYPE	DOC PART	REVISION
SD-130061-028	PSD	001	D1

THIRD ANGLE PROJECTION	DRAWING	SERIES	MATERIAL NUMBER	CUSTOMER	SHEET NUMBER
	C-SIZE	130061	SEE CHART	GENERAL MARKET	1 OF 1

DOCUMENT STATUS	P1	RELEASE DATE	2024/08/02 13:29:01

FORMAT: IN-CAD-tb-prod-C
REVISION: B
DATE: 2020/01/14