MATERIAL NO.	ENGINEERING NO.	FINISHED LENGTH
1300131200	1R3000A22M005	19.69 IN [0.5M]
1300131201	1R3000A22M010	39.37 IN [1M]
1300131202	1R3000A22M020	78.74 IN [2M]
1300131203	1R3000A22M030	118.11 IN [3M]
1300131204	1R3000A22M040	157.48 IN [4M]
1300131205	1R3000A22M050	196.85 IN [5M]

A2

TOLERANCE CHART

FINISH LENGTH [FT] OVER	FINISH LENGTH [FT] UNDER	TOLERANCE [IN]	FINISH LENGTH [M] OVER	FINISH LENGTH [M] UNDER	TOLERANCE [mm]
0.00	.167	N/A	0.0	0.05	NA
.167	.500	+.63 -0	0.05	0.15	+16 -0
.500	1.00	+.75 -0	0.15	0.3	+19 -0
1.00	3.00	+1.75 -0	0.3	0.9	+44.5 -0
3.00	6.00	+2.19 -0	0.9	1.8	+55.6 -0
6.00	12.00	+3.50 -0	1.8	3.7	+88.8 -0
12.00	24.00	+6.50 -0	3.7	7.3	+165.1 -0
24.00	48.00	+12.50 -0	7.3	21.9	+317.5 -0
48.00	96.00	+24.50 -0	21.9	29.3	+622.3 -0
96.00	~	+2.00% -0	29.3	~	+2% OF FIN LGTH

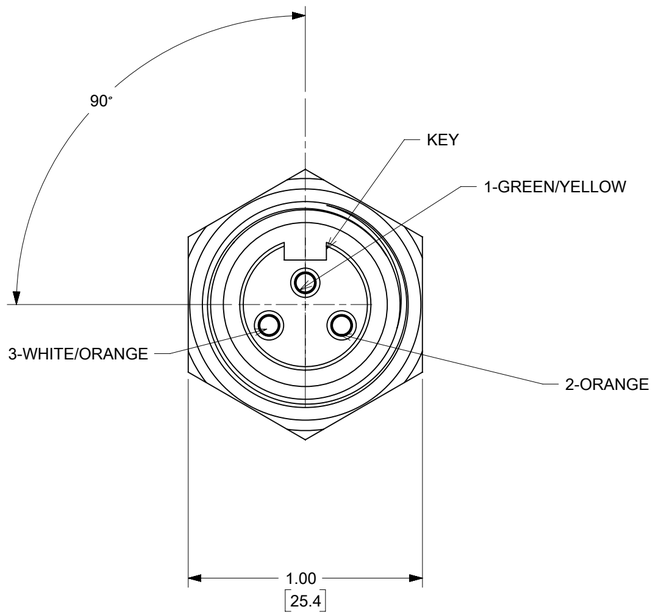

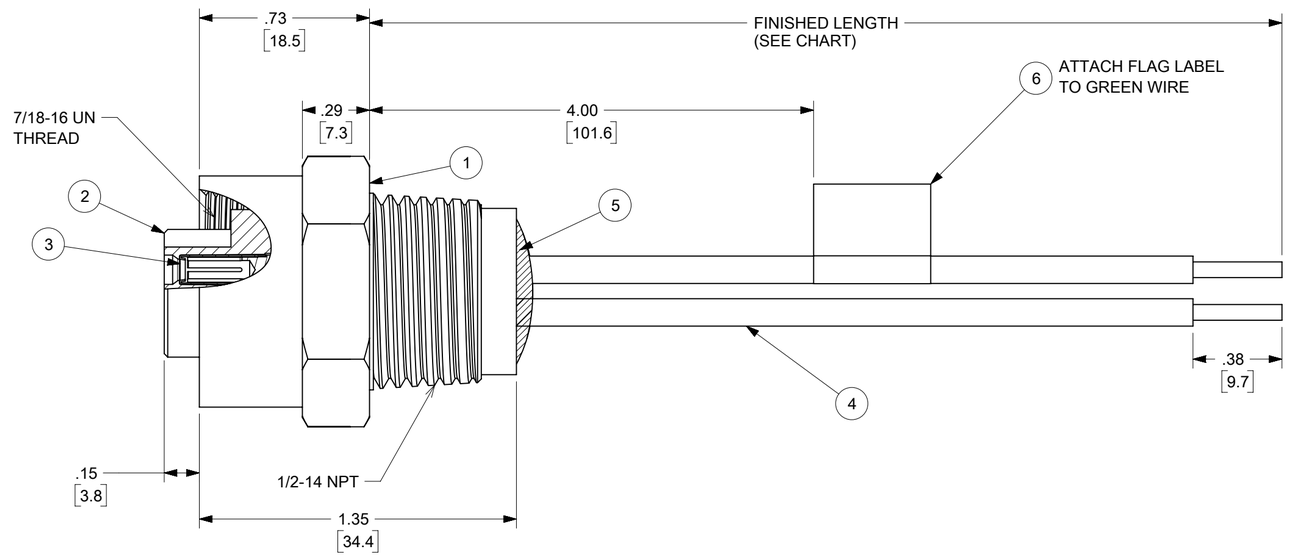

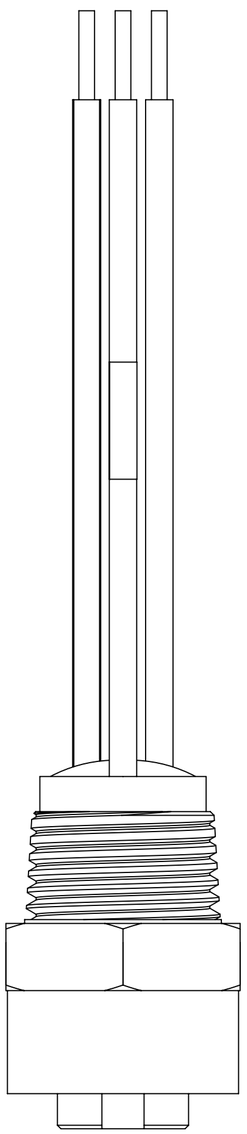

NOTES:
1. MATERIAL: AS NOTED
2. FINISH: AS NOTED
3. ELECTRICAL:
   VOLTAGE: 500V PER IEC60664
   600V PER UL2238
   CURRENT: 13A
4. TEMP RATING: -20°C TO +105°C
5. PROTECTION: IP67 (WHEN MATED)
6. UL RECOGNIZED FILE: E152210
   CSA CERTIFIED FILE: LR6837
7. ALL DIMS ARE FOR REFERENCE UNLESS TOLERANCED OR NOTED OTHERWISE

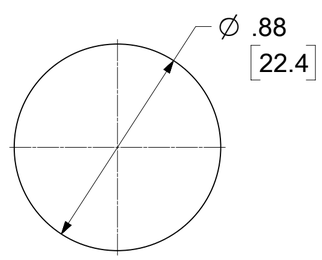

REF. KNOCKOUT HOLE

PART NO. MATRIX
1R3000A22M005

FINISHED LENGTH
M005 = 0.5 METER
M010 = 1.0 METER
M100 = 10.0 METERS

ITEM	DESCRIPTION	MATERIAL	FINISH
6	FLAG LABEL	VINYL	BLACK/YELLOW
5	POTTING MATERIAL	EPOXY	
4	WIRE #16 (UL 1015)	PVC INSULATION	SEE FACE VIEW
3	CONTACT SOCKET & SLEEVE ASSY.	Cu ALLOY	GOLD PLATED
2	INSERT	TPE	YELLOW
1	RECEPTACLE SHELL	ZINC (DIE-CAST)	NICKEL PLATED

DOCUMENT STATUS | P1 | RELEASE DATE | 2025/02/28 16:56:14

THIS DRAWING CONTAINS INFORMATION THAT IS PROPRIETARY TO MOLEX ELECTRONIC TECHNOLOGIES, LLC AND SHOULD NOT BE USED WITHOUT WRITTEN PERMISSION

DIMENSION UNITS: INCH/MM
SCALE: 2:1

GENERAL TOLERANCES (UNLESS SPECIFIED)

	MM	INCH
4 PLACES	±	±
3 PLACES	±	±
2 PLACES	±	±
1 PLACE	±	±
0 PLACES	±	±
ANGULAR TOL	± °	

DRAFT WHERE APPLICABLE MUST REMAIN WITHIN DIMENSIONS

CURRENT REV DESC: PART NUMBER TABLE WAS CORRECTED TO MATCH WITH SAP

EC NO: 814239
DRWN: LESPINOZA 2025/02/28
CHK'D: ZACHAH14 2025/02/28
APPR: BWOODMAN 2025/02/28

INITIAL REVISION:
DRWN: LESPINOZA 2024/09/23
APPR: BWOODMAN 2024/11/14

THIRD ANGLE PROJECTION | DRAWING: C-SIZE | SERIES: 130013

molex

MINI-CHANGE RECEPTACLE, A SIZE
3P, FEMALE, STRAIGHT, SINGLE KEY, 16 AWG

PRODUCT CUSTOMER DRAWING

DOCUMENT NUMBER	DOC TYPE	DOC PART	REVISION
1300131200	PSD	000	A2

MATERIAL NUMBER	CUSTOMER	SHEET NUMBER
SEE TABLE	GENERAL MARKET	1 OF 1

FORMAT: Eng-legs-master-tb-prod-C
REVISION: E1
DATE: 2021/05/21