MATERIAL NO.	ENGINEERING NO.	FINISHED LENGTH
1201080565	E11A06017M005	0.5M [1FT 8 IN]
1201080720	E11A06017M400	40M [131FT 3 IN]
1201080893	E11A06017M850	85M [278FT 10 IN]

(C)

CABLE LENGTH TOLERANCES
<.3M [1FT]: +19mm-0 [+.75in-0]
.3 - .9M [1 - 3FT]: +44.5mm-0 [+1.75in-0]
.9 - 1.8M [3 - 6FT]: +55.6mm-0 [+2.19in-0]
1.8 - 3.7M [6 - 12FT: +88.9mm-0 [+3.50in-0]
3.7 - 7.3M [12 - 24FT]: +165.1mm-0 [+6.50in-0]
7.3-14.6M [24 - 48FT]: +317.5mm-0 [+12.50in-0]
14.6 - 30.5M [48-100FT]: +622.3mm-0 [+24.50in-0]
OVER 30M [100FT] +2% OF FINISHED LENGTH

FRONT VIEW - MALE INSERT

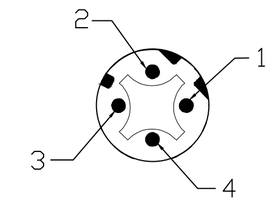

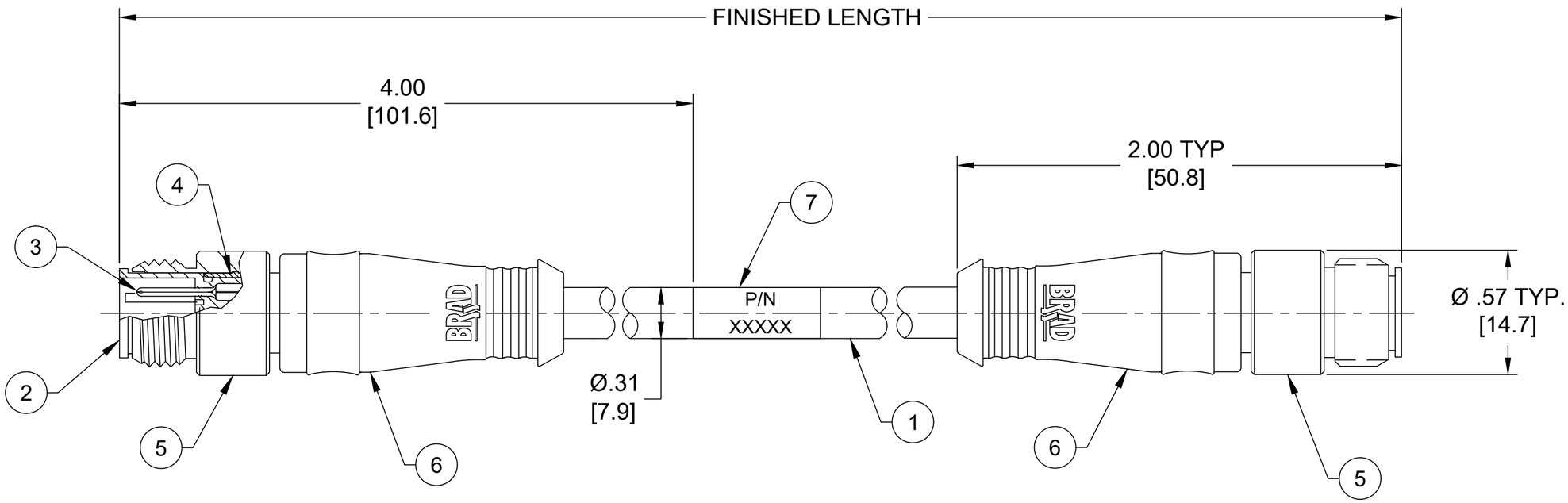

NOTES:

1. MATERIAL: AS NOTED
2. FINISH: AS NOTED
3. ELECTRICAL:
   VOLTAGE: 30V
   CURRENT: 1.5A
4. TEMP RATING: -20° TO +80°C
5. PROTECTION: IP67 (WHEN MATED)
6. COUPLING THREAD: M12 X 1
7. UL RECOGNIZED FILE: E200650
8. ALL DIMENSIONS ARE FOR REFERENCE UNLESS TOLERANCED OR NOTED OTHERWISE

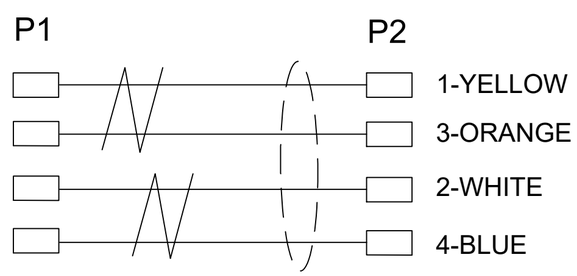

WIRING DIAGRAM

PART NUMBER LEGEND

E11A06017M005

FINISHED LENGTH:
M005= 0.5 METER
M010= 1 METER
M100= 10 METER

ITEM	COMPONENT	MATERIAL	FINISH
7	WRAP LABEL	VINYL	YELLOW
6	OVERMOLD	TPC	GRAY (C)
5	COUPLINT NUT	BRASS	NICKEL PLATED
4	SHIELD HOUSING	BRASS	NICKEL PLATED
3	CONTACT PIN	COPPER ALLOY	GOLD PLATED
2	MALE INSERT, D-CODE	PUR	BLACK
1	CABLE, 2 PAIR, 22AWG, SHLD	TPE JACKET	GREEN (C)

DOCUMENT STATUS	P1	RELEASE DATE	2024/08/16 22:31:07

FUNCTIONAL SYMBOLS: FA=0, FC=0, FP=0
DIVISIONAL SYMBOLS

THIS DRAWING CONTAINS INFORMATION THAT IS PROPRIETARY TO MOLEX ELECTRONIC TECHNOLOGIES, LLC AND SHOULD NOT BE USED WITHOUT WRITTEN PERMISSION

DIMENSION UNITS: INCH/MM
SCALE: NTS

GENERAL TOLERANCES (UNLESS SPECIFIED)

	mm	INCH
4 PLACES	±----	±----
3 PLACES	±----	±----
2 PLACES	±----	±----
1 PLACE	±----	±----
0 PLACES	±----	±----
ANGULAR TOL ± ---- °		

DRAFT WHERE APPLICABLE MUST REMAIN WITHIN DIMENSIONS

CURRENT REV DESC: ITEM-1 CHANGED FROM 26AWG TO 22AWG. ITEM-6 WAS PBT. MODIFIED PN CHART.

EC NO: 795279
DRWN: ABENJAMINLW 2024/08/13
CHK'D: PDODDAMANEMY 2024/08/14
APPR: BWOODMAN 2024/08/16

INITIAL REVISION:
DRWN: RSTONE 2015/10/08
APPR: BWOODMAN 2015/10/12

THIRD ANGLE PROJECTION

molex

M12 D-CODE CABLE ASSY
PROFI-NET MALE/MALE

PRODUCT CUSTOMER DRAWING

DOCUMENT NUMBER	DOC TYPE	DOC PART	REVISION
SD-120108-091	PSD	001	C

DRAWING	SERIES	MATERIAL NUMBER	CUSTOMER	SHEET NUMBER
C-SIZE	120108	SEE CHART	GENERAL MARKET	1 OF 1

FORMAT: IN-ACAD-lb-proc-C
REVISION: C
DATE: 2022/10/04