MALE PLUG M12 STRAIGHT

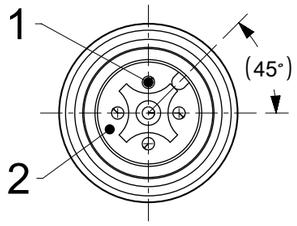

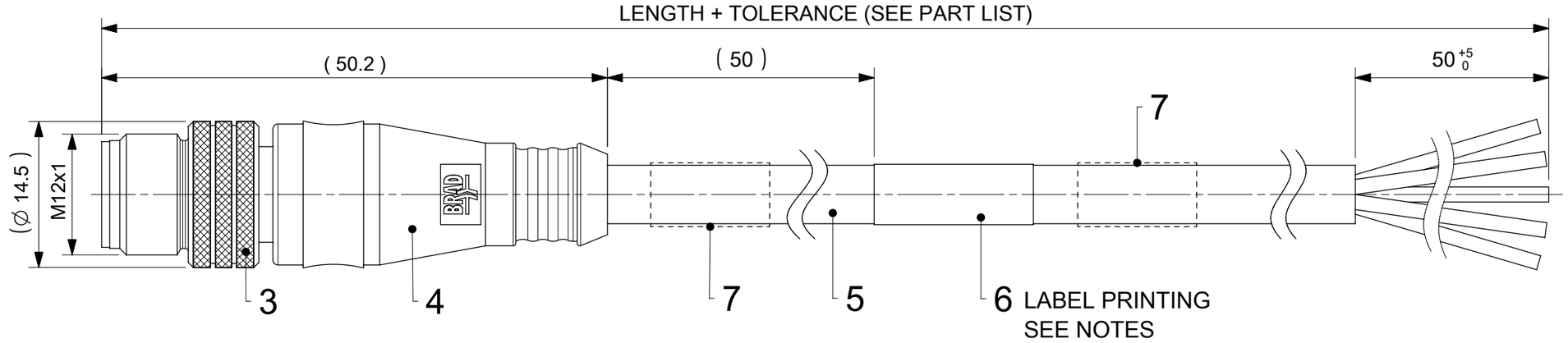

NOTES:

RATED VOLTAGE: 3, 4 contacts 250V
5 contacts 60V
8 contacts 30V

RATED CURRENT: 3, 4, 5 contacts 4A
8 contacts 2A

PROTECTION CLASS: IP 67

TEMPERATURE : SEE CABLE INFORMATION ON SHEET 2

LABEL PRINTING ACC. STANDARD LABEL INSTRUCTION (SEE SHEET 3)

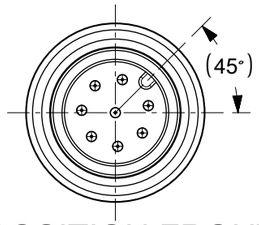

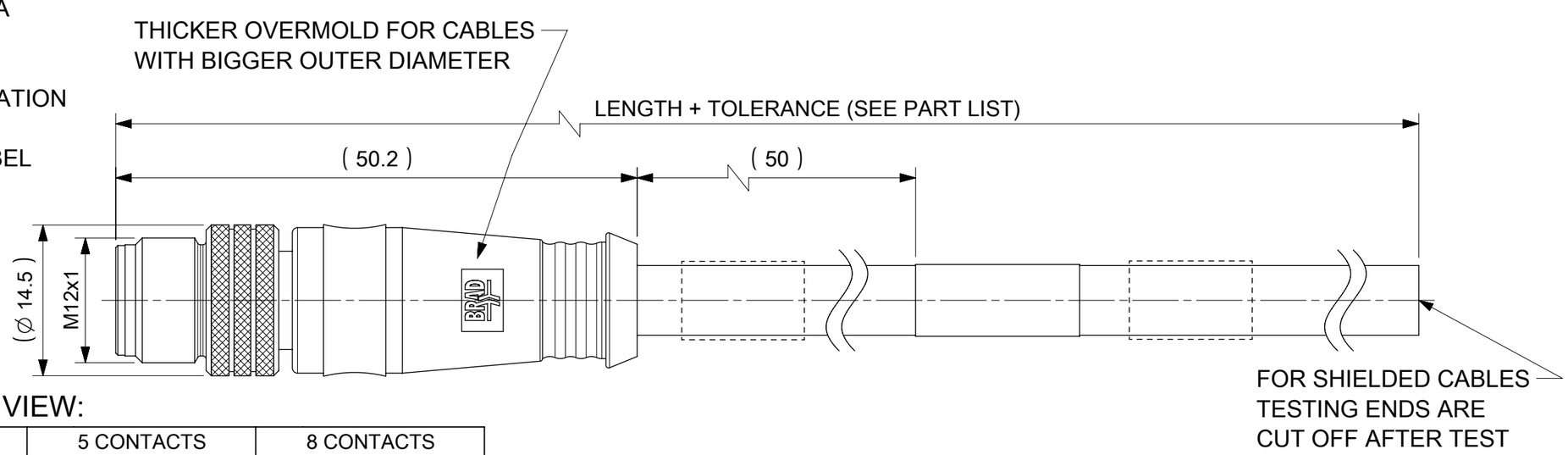

CONTACTS POSITION FRONT VIEW:

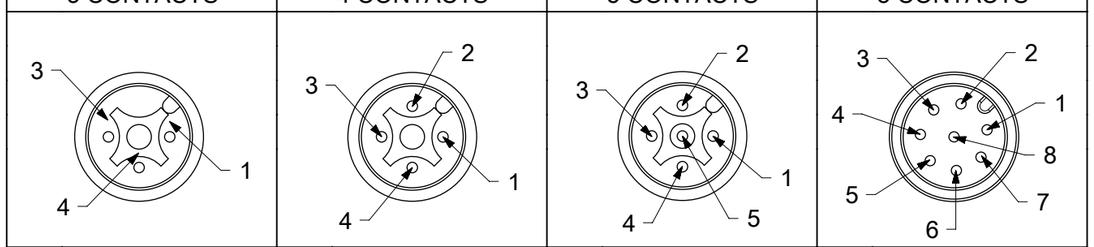

3 CONTACTS		4 CONTACTS		5 CONTACTS		8 CONTACTS	
PIN	WIRE	PIN	WIRE	PIN	WIRE	PIN	WIRE
1	BROWN	1	BROWN	1	BROWN	1	WHITE
2	---	2	WHITE	2	WHITE	2	BROWN
3	BLUE	3	BLUE	3	BLUE	3	GREEN
4	BLACK	4	BLACK	4	BLACK	4	YELLOW
5	---	5	---	5	GREY OR GREEN/YELLOW	5	GREY
						6	PINK
						7	BLUE
						8	RED
CODING REQUIRED TO IEC 61076-2-101							

FOR OPTIONS SEE - NUMERICAL CODE - ON SHEET 2

ITEM	QTY.	DESCRIPTION	MATERIAL	FINISH
7	SEE MATRIX	D CARRIER	PVC	TRANSPARENT
6	1	LABEL YELLOW	VINYL	---
5	-	CABLE	SEE SHEET 2	---
4	-	OVERMOLDING BLACK	TPU	---
3	1	COUPLING NUT MALE	BRASS	NICKEL
2	1	INSERT MALE BLACK	PUR	---
1	3 / 4 / 5 / 8	CONTACT M12 MALE	BRASS	SELECTIVE Au OVER Ni

THIS DRAWING CONTAINS INFORMATION THAT IS PROPRIETARY TO MOLEX ELECTRONIC TECHNOLOGIES, LLC AND SHOULD NOT BE USED WITHOUT WRITTEN PERMISSION

FUNCTIONAL SYMBOLS: FA = 0, FC = 0, FP = 0

DIVISIONAL SYMBOLS

DIMENSION UNITS: mm — SCALE: 2:1

GENERAL TOLERANCES (UNLESS SPECIFIED)

ANGULAR TOL	±	1.0 °
4 PLACES	±	
3 PLACES	±	
2 PLACES	±	0.05
1 PLACE	±	0.3
0 PLACES	±	0.5

DRAFT WHERE APPLICABLE MUST REMAIN WITHIN DIMENSIONS

CURRENT REV DESC: PN AND CABLE TAKEN FROM DRAWING 1200650971, LAYOUT REVISED

EC NO: 822575
DRWN: RSCHIEBER 2025/04/08
CHK'D: RSILLER 2025/05/20
APPR: RSILLER 2025/05/20

INITIAL REVISION:
DRWN: JMARSZALEK 2016/01/12
APPR: RSILLER 2016/04/08

THIRD ANGLE PROJECTION — DRAWING: A3-SIZE — SERIES: 120065

molex

CSE M12 XP AC MA STR XM SE

PRODUCT CUSTOMER DRAWING

DOCUMENT NUMBER	DOC TYPE	DOC PART	REVISION
1200659185	PSD	000	A13

MATERIAL NUMBER	CUSTOMER	SHEET NUMBER
SEE PART LIST	GENERAL MARKET	1 OF 5

DOCUMENT STATUS	P1	RELEASE DATE	2025/05/20 07:26:55

FORMAT: master-tb-prod-A3
REVISION: J1
DATE: 2021/05/01

ENGINEERING NO. - NUMERICAL CODE (Available parts see PART LIST table. Others on request).

OPTIONS

8	0	X	0	0	6	X	X	X	X	X	X	X	X

- 80=M12x1 Single ended
- Contacts: 3=3 Contacts, 4=4 Contacts, 5=5 Contacts, 8=8 Contacts
- Heads style: 006=Plug Male Straight
- Cable type: See Table
- Units: M=Meter
- Length Examples: 005=0.5 unit, 010=1 unit, 100=10 units
- Overmold color: Blank (Standard)=Black; A=Grey / G=Black / Y=Yellow; For Cable A09=Yellow
- Coupling Nut: Blank (Standard) & 3=Knurled Brass Ni Plated; 1 or 8=Hexagonal Stainless steel; 5=Knurled Derlin; 7=Knurled Brass Ni Plated, Teflon Coated; Blank=7 for cables I20, I26, K03, K05, P82, S26; 9=Knurled / Hexagonal Brass Ni Plated
- H= 2 pcs. of I/D Carrier PVC Transparent

COUPLING NUTS

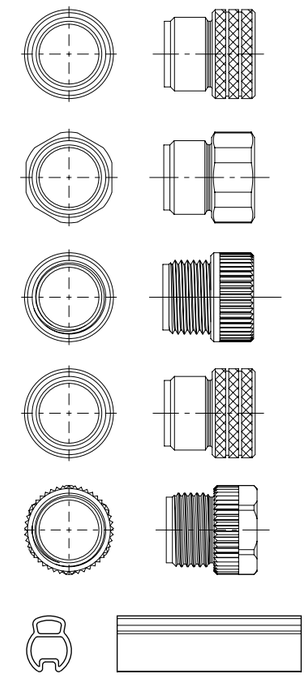

CABLE INFORMATION (for more information see Cable Data Sheet).

CABLE TYPE	NO. OF WIRES	CROSS SECTION	CABLE JACKET	UL	CSA	STATIC: TEMP. / BENDING RADIUS	DYNAMIC: TEMP. / BENDING RADIUS	DRAG CHAIN	SHIELD
E02	3 / 4 / 8	0.25mm²	PVC BLACK	UL 2464/1729	C22.2 I/II A/B 80°C/300V	-30°C to +80°C, 10xO.D.	-10°C to +80°C, 15xO.D.	-	-
E03	3 / 4 / 5	0.34mm²	PVC BLACK	UL 2464/1729	C22.2 I/II A/B 80°C/300V	-30°C to +80°C, 10xO.D.	-10°C to +80°C, 15xO.D.	-	-
H08	5 / 8	0.25mm²	PUR BLACK LS0H	UL 21198/10493	C22.2 I/II A/B 80°C/300V	-40°C to +80°C, 5xO.D.	-25°C to +80°C, 10xO.D.	2 000 000 cycles at 20°C, Temp. range +5°C to +60°C	-
H09	3 / 4 / 5	0.34mm²	PUR BLACK LS0H	UL 21198/10493	C22.2 I/II A/B 80°C/300V	-40°C to +80°C, 5xO.D.	-25°C to +80°C, 10xO.D.	2 000 000 cycles at 20°C, Temp. range +5°C to +60°C	-
P02	8	0.25mm²	PUR / PVC BLACK	-	-	-30°C to +80°C, 7xO.D.	-5°C to +80°C, 15xO.D.	-	-
P03	3 / 4 / 5	0.34mm²	PUR / PVC BLACK	-	-	-30°C to +80°C, 7xO.D.	-5°C to +80°C, 15xO.D.	-	-
A09	3 / 4	0.34mm²	PVC YELLOW	-	-	-	-	-	-
K05	4	0.38mm²	TPE YELLOW	-	-	-	-	-	-
E52	3 / 4 / 8	0.34mm²	PVC GREY	-	-	-30°C to +70°C	-5°C to +70°C	-	-
I03	3 / 4 / 5	0.34mm²	PVC CEI GREY	-	-	-30°C to +70°C	-5°C to +70°C	-	-
I20	4	0.34mm²	PVC CEI GREY	-	-	-30°C to +70°C	-5°C to +70°C	-	YES
I26	5	0.34mm²	PVC CEI GREY	-	-	-30°C to +70°C	-5°C to +70°C	-	-
K03	4 / 5	0.34mm²	TPE YELLOW	UL JEC 60332-1 or PLCT	I/II 90°C/300V	-	-	-	-
P04	4	0.50mm²	PUR BLACK	-	-	-40°C to +90°C, 7.5xO.D.	-15°C to +90°C, 12.5xO.D.	-	-
P12	3 / 5	0.50mm²	PUR BLACK	-	-	-30°C to +90°C	-5°C to +90°C	-	-
P20	4 / 5	0.34mm²	PUR BLACK LS0H	-	-	-30°C to +80°C	-	-	YES
P82	3	0.34mm²	PUR IRR ORANGE	-	-	-50°C to +105°C, 5xO.D.	-40°C to +105°C, 7.5xO.D.	-	-
S19	8	0.25mm²	PVC YELLOW	UL 2661/1569	C22.2 II A 105°C/300V	-30°C to +105°C, 10xO.D.	-15°C to +105°C, 15xO.D.	-	YES
S20	3 / 4 / 5	0.34mm²	PVC YELLOW	UL 2661/1731	C22.2 II A 105°C/300V	-30°C to +105°C	-	-	YES
S26	5	0.34mm²	PVC YELLOW	UL 2661/1731	C22.2 II A 105°C/300V	-30°C to +105°C	-	-	YES

THIS DRAWING CONTAINS INFORMATION THAT IS PROPRIETARY TO MOLEX ELECTRONIC TECHNOLOGIES, LLC AND SHOULD NOT BE USED WITHOUT WRITTEN PERMISSION

FUNCTIONAL SYMBOLS: A = 0; C = 0; F = 0

DIVISIONAL SYMBOLS

DIMENSION UNITS: mm
SCALE: 1:1

GENERAL TOLERANCES (UNLESS SPECIFIED)

ANGULAR TOL	±	1.0 °
4 PLACES	±	
3 PLACES	±	
2 PLACES	±	0.05
1 PLACE	±	0.3
0 PLACES	±	0.5

DRAFT WHERE APPLICABLE MUST REMAIN WITHIN DIMENSIONS

CURRENT REV DESC: PN AND CABLE TAKEN FROM DRAWING 1200650971, LAYOUT REVISED

EC NO: 822575
DRWN: RSCHIEBER 2025/04/08
CHK'D: RSILLER 2025/05/20
APPR: RSILLER 2025/05/20

INITIAL REVISION:
DRWN: JMARSZALEK 2016/01/12
APPR: RSILLER 2016/04/08

THIRD ANGLE PROJECTION | DRAWING: A3-SIZE | SERIES: 120065

molex

CSE M12 XP AC MA STR XM SE

PRODUCT CUSTOMER DRAWING

DOCUMENT NUMBER	DOC TYPE	DOC PART	REVISION
1200659185	PSD	000	A13

MATERIAL NUMBER	CUSTOMER	SHEET NUMBER
SEE PART LIST	GENERAL MARKET	2 OF 5

DOCUMENT STATUS	P1	RELEASE DATE	2025/05/20 07:26:55

FORMAT: master-lb-prod-A3
REVISION: J1
DATE: 2021/05/01

PART LIST

MOLEX P/N	ENGINEERING No.	L [mm]
3P CABLE E52		
1200060243	803006E52M050A	5000
4P CABLE E52		
1200651788	804006E52M005A	500
1200651790	804006E52M050A	5000
1200061663	804006E52M100A	10000
1200061664	804006E52M200A	20000
8P CABLE E52		
1200657336	808006E52M005	500
3P CABLE I03		
1200060252	803006I03M020	2000
1200060253	803006I03M030	3000
1200658595	803006I03M040	4000
1200060254	803006I03M050	5000
4P CABLE I03		
1200658325	804006I03M010	1000
1200060565	804006I03M020	2000
1200658601	804006I03M040	4000
1200060567	804006I03M050	5000
1200659122	804006I03M050Y	5000
1200060568	804006I03M100	10000
5P CABLE I03		
1200064444	805006I03C150	150
1200060674	805006I03M005	500
1200060675	805006I03M020	2000
4P CABLE I20		
1200061023	804006I20M003	300
5P CABLE I26		
1200061781	805006I26M050	5000
4P CABLE K03		
1200652024	804006K03M006	600
1200651357	804006K03M010	1000
1200651359	804006K03M020	2000
1200652025	804006K03M036	3600
1200651361	804006K03M050	5000
1200064547	804006K03M100	10000
5P CABLE K03		
1200651374	805006K03M020	2000
1200652151	805006K03M050	5000

MOLEX P/N	ENGINEERING No.	L [mm]
4P CABLE P04		
1200658809	804006P04M003	300
3P CABLE P12		
1200063355	803006P12M0023	200
5P CABLE P12		
1200062618	805006P12M0035	300
1200658094	805006P12M006	600
1200062540	805006P12M010	1000
1200062541	805006P12M015	1500
1200062441	805006P12M020	2000
1200062770	805006P12M030	3000
1200063371	805006P12M050	5000
4P CABLE P20		
1200658497	804006P20M150	15000
5P CABLE P20		
1200063282	805006P20M010	1000
3P CABLE P82		
1200064014	803006P82M0067	600
1200064375	803006P82M0107	1000
8P CABLE S19		
1200650971	808006S19M010	1000
1200699506	808006S19M020	2000
1200699507	808006S19M030	3000
1200699508	808006S19M050	5000
1200699509	808006S19M100	10000
3P CABLE S20		
1200061551	803006S20M050	5000
1200062606	803006S20M100	10000
4P CABLE S20		
1200060578	804006S20M010	1000
1200659364	804006S20M010H	1000
1200060579	804006S20M020	2000
1200658961	804006S20M0201	2000
1200658201	804006S20M050	5000
1200658965	804006S20M0501	5000
1200060581	804006S20M100	10000
1200658962	804006S20M1001	10000
1200659347	804006S20M350	35000

MOLEX P/N	ENGINEERING No.	L [mm]
5P CABLE S20		
1200658973	805006S20M050	5000
5P CABLE S26		
1200060684	805006S26M020	2000
1200658170	805006S26M050	5000
1200659174	805006S26M050H	5000
3P CABLE A09		
1200650200	803006A09M020	2000
1200650843	803006A09M0208	2000
1200650205	803006A09M0508	5000
1200650207	803006A09M100	10000
1200650844	803006A09M1008	10000
4P CABLE A09		
1200650411	804006A09M010	1000
1200650913	804006A09M0208	2000
1200650914	804006A09M0308	3000
1200072456	804006A09M0401	4000
1200650419	804006A09M050	5000
1200650915	804006A09M0508	5000
1200650917	804006A09M1008	10000
1200656063	804006A09M1508	15000
1200659605	804006A09M2008	20000
3P CABLE E03		
1200064353	803006E03M003	300
1200658526	803006E03M005	500
1200658565	803006E03M010	1000
1200659104	803006E03M010Y	1000
1200060240	803006E03M020	2000
1200062017	803006E03M030	3000
1200658566	803006E03M040	4000
1200060241	803006E03M050	5000
1200062351	803006E03M0505	5000
1200658881	803006E03M050G	5000
1200656293	803006E03M080	8000
1200060242	803006E03M100	10000
1200062352	803006E03M1005	10000
1200656294	803006E03M120	12000
1200061611	803006E03M150	15000

MOLEX P/N	ENGINEERING No.	L [mm]
4P CABLE E03		
1200064251	804006E03M003	300
1200064252	804006E03M005	500
1200658265	804006E03C550	550
1200060558	804006E03M006	600
1200060559	804006E03M010	1000
1200658784	804006E03M0101H	1000
1200063470	804006E03M010H	1000
1200657159	804006E03M015	1500
1200060560	804006E03M020	2000
1200062122	804006E03M0201	2000
1200658518	804006E03M0201H	2000
1200062830	804006E03M0205	2000
1200658888	804006E03M020H	2000
1200659080	804006E03M020Y	2000
1200060561	804006E03M030	3000
1200658571	804006E03M040	4000
1200060562	804006E03M050	5000
1200063732	804006E03M0501	5000
1200658519	804006E03M0501H	5000
1200062877	804006E03M0505	5000
1200658893	804006E03M050H	5000
1200659186	804006E03M060	6000
1200658542	804006E03M070	7000
1200656295	804006E03M080	8000
1200060563	804006E03M100	10000
1200063733	804006E03M1001	10000
1200658785	804006E03M1001H	10000
1200062920	804006E03M1005	10000
1200060046	804006E03M120	12000
1200659550	804006E03M120H	12000
1200658876	804006E03M150	15000
1200063856	804006E03M1501	15000
1200062426	804006E03M200	20000
1200063969	804006E03M2001	20000
1200659194	804006E03M250	25000
1200064231	804006E03M2501	25000
1200659195	804006E03M300	30000
1200659196	804006E03M350	35000

NOTES:

* - Part No. with Yellow PVC overmolding

** - Part No. with Black PVC overmolding

LABEL PRINTING

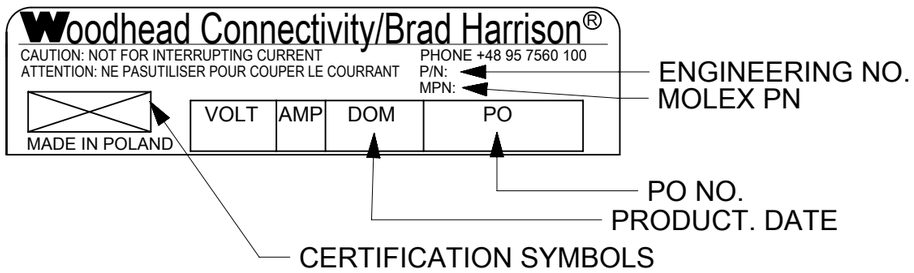

DOCUMENT STATUS	P1	RELEASE DATE	2025/05/20 07:26:55

FORMAT: master-tb-prod-A3
REVISION: J1
DATE: 2021/05/01

FUNCTIONAL SYMBOLS: FA = 0, FC = 0, FP = 0

DIVISIONAL SYMBOLS

THIS DRAWING CONTAINS INFORMATION THAT IS PROPRIETARY TO MOLEX ELECTRONIC TECHNOLOGIES, LLC AND SHOULD NOT BE USED WITHOUT WRITTEN PERMISSION

DIMENSION UNITS	SCALE
mm	1:1

GENERAL TOLERANCES (UNLESS SPECIFIED)

ANGULAR TOL	±	1.0 °
4 PLACES	±	
3 PLACES	±	
2 PLACES	±	0.05
1 PLACE	±	0.3
0 PLACES	±	0.5

DRAFT WHERE APPLICABLE MUST REMAIN WITHIN DIMENSIONS

CURRENT REV DESC: PN AND CABLE TAKEN FROM DRAWING 1200650971, LAYOUT REVISED

EC NO: 822575
DRWN: RSCHIEBER 2025/04/08
CHK'D: RSILLER 2025/05/20
APPR: RSILLER 2025/05/20

INITIAL REVISION:
DRWN: JMARSZALEK 2016/01/12
APPR: RSILLER 2016/04/08

THIRD ANGLE PROJECTION | DRAWING: A3-SIZE | SERIES: 120065

molex

CSE M12 XP AC MA STR XM SE

PRODUCT CUSTOMER DRAWING

DOCUMENT NUMBER	DOC TYPE	DOC PART	REVISION
1200659185	PSD	000	A13

MATERIAL NUMBER	CUSTOMER	SHEET NUMBER
SEE PART LIST	GENERAL MARKET	3 OF 5

PART LIST

MOLEX P/N	ENGINEERING No.	L [mm]
4P CABLE E03		
1200659197	804006E03M400	40000
1200659198	804006E03M450	45000
1200659254	804006E03M500	50000
5P CABLE E03		
1200062596	805006E03M003	300
1200657191	805006E03M005	500
1200655051	805006E03M006	600
1200658209	805006E03M0061	600
1200062799	805006E03M010	1000
1200659551	805006E03M010H	1000
1200659367	805006E03M015	1500
1200060667	805006E03M020	2000
1200060668	805006E03M030	3000
1200659513	805006E03M030H	3000
1200063953	805006E03M035	3500
1200659454	805006E03M045	4500
1200659514	805006E03M045H	4500
1200061345	805006E03M050	5000
1200659455	805006E03M075	7500
1200659515	805006E03M075H	7500
1200659185	805006E03M080	8000
1200062209	805006E03M100	10000
1200658500	805006E03M1001	10000
1200659285	805006E03M150	15000
1200658897	805006E03M200	20000
1200659145	805006E03M300	30000
3P CABLE E02		
1200659692	803006E02M020	2000
1200659111	803006E02M050	5000
4P CABLE E02		
1200063077	804006E02M005	500
1200659109	804006E02M020	2000
1200659034	804006E02M050	5000
1200659036	804006E02M070	7000
1200659991	804006E02M0705	7000
1200659983	804006E02M075	7500
1200659037	804006E02M100	10000

MOLEX P/N	ENGINEERING No.	L [mm]
8P CABLE E02		
1200658223	808006E02M003	300
1200658552	808006E02M0031	300
1200658226	808006E02M0038	300
1200658815	808006E02M003G	300
1200659041	808006E02M005	500
1200658918	808006E02M005H	500
1200658859	808006E02M0061G	600
1200658576	808006E02M010	1000
1200658919	808006E02M010H	1000
1200658577	808006E02M020	2000
1200658578	808006E02M030	3000
1200658478	808006E02M040	4000
1200658546	808006E02M050	5000
1200659110	808006E02M0501	5000
1200658579	808006E02M100	10000
1200659539	808006E02M100	10000
1200659284	808006E02M150	15000
5P CABLE H08		
1200650977	805006H08M005	500
8P CABLE H08		
1200656297	808006H08M005	500
1200658658	808006H08M010	1000
1200658659	808006H08M015	1500
1200658660	808006H08M020	2000
1200658814	808006H08M025	2500
1200658661	808006H08M030	3000
1200658662	808006H08M040	4000
1200658663	808006H08M050	5000
1200658263	808006H08M100	10000
3P CABLE H09		
1200658892	803006H09M003	300
1200658653	803006H09M010	1000
1200658654	803006H09M015	1500
1200658655	803006H09M020	2000
1200658656	803006H09M030	3000
1200658657	803006H09M040	4000
1200658248	803006H09M050	5000
1200658247	803006H09M100	10000

MOLEX P/N	ENGINEERING No.	L [mm]
4P CABLE H09		
1200658890	804006H09M003	300
1200658727	804006H09M010	1000
1200658728	804006H09M015	1500
1200658729	804006H09M020	2000
1200658730	804006H09M030	3000
1200658731	804006H09M040	4000
1200658732	804006H09M050	5000
1200656021	804006H09M050H	5000
1200658733	804006H09M100	10000
1200658895	804006H09M200	20000
5P CABLE H09		
1200656974	805006H09M003	300
1200659149	805006H09M005	500
1200658741	805006H09M010	1000
1200658742	805006H09M015	1500
1200658743	805006H09M020	2000
1200658744	805006H09M030	3000
1200658745	805006H09M040	4000
1200658746	805006H09M050	5000
1200658747	805006H09M100	10000
1200659141	805006H09M200	20000
1200657263	805006H09M250	25000
1200659142	805006H09M300	30000
3P CABLE K05		
1200652219	803006K05M010	1000
4P CABLE K05		
1200651129	804006K05M020	2000
1200651131	804006K05M050	5000
1200651133	804006K05M100	10000
1200652049	804006K05M150	15000
1200652506	804006K05M250	25000
8P CABLE P02		
1200658109	808006P02M003	300
1200062560	808006P02M005	500
1200658181	808006P02M010	1000
1200650964	808006P02M020	2000
1200651763	808006P02M030	3000
1200650967	808006P02M040	4000

MOLEX P/N	ENGINEERING No.	L [mm]
8P CABLE P02		
1200650968	808006P02M050	5000
1200658016	808006P02M060	6000
1200650969	808006P02M100	10000
1200658110	808006P02M150	15000
1200650970	808006P02M200	20000
3P CABLE P03		
1200060256	803006P03M002	200
1200658055	803006P03M003	300
1200064160	803006P03M005	500
1200064464	803006P03M005G	500
1200061853	803006P03M010	1000
1200060257	803006P03M020	2000
1200060260	803006P03M030	3000
1200063018	803006P03M0303	3000
1200658057	803006P03M035	3500
1200658612	803006P03M040	4000
1200060261	803006P03M050	5000
1200658613	803006P03M100	10000
4P CABLE P03		
1200657157	804006P03M002	200
1200659557	804006P03M003	300
1200657158	804006P03M005	500
1200061855	804006P03M006	600
1200064347	804006P03M007	700
1200061633	804006P03M010	1000
1200064261	804006P03M011	1100
1200659179	804006P03M015	1500
1200060570	804006P03M020	2000
1200064393	804006P03M020G	2000
1200060571	804006P03M030	3000
1200652141	804006P03M040	4000
1200063941	804006P03M0401	4000
1200060047	804006P03M050	5000
1200658076	804006P03M0505	5000
1200652142	804006P03M060	6000
1200064240	804006P03M070	7000
1200659178	804006P03M075	7500
1200659612	804006P03M080	8000

NOTES:

* - Part No. with Yellow PVC overmolding

** - Part No. with Black PVC overmolding

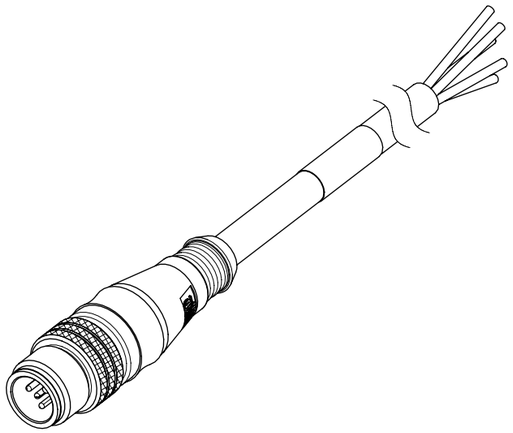

THIS DRAWING CONTAINS INFORMATION THAT IS PROPRIETARY TO MOLEX ELECTRONIC TECHNOLOGIES, LLC AND SHOULD NOT BE USED WITHOUT WRITTEN PERMISSION

FUNCTIONAL SYMBOLS: FA = 0, FC = 0, FP = 0

DIVISIONAL SYMBOLS

DIMENSION UNITS	SCALE
mm	1:1

GENERAL TOLERANCES (UNLESS SPECIFIED)

ANGULAR TOL	± 1.0 °
4 PLACES	±
3 PLACES	±
2 PLACES	± 0.05
1 PLACE	± 0.3
0 PLACES	± 0.5

DRAFT WHERE APPLICABLE MUST REMAIN WITHIN DIMENSIONS

CURRENT REV DESC: PN AND CABLE TAKEN FROM DRAWING 1200650971, LAYOUT REVISED

EC NO: 822575
DRWN: RSCHIEBER 2025/04/08
CHK'D: RSILLER 2025/05/20
APPR: RSILLER 2025/05/20

INITIAL REVISION:
DRWN: JMARSZALEK 2016/01/12
APPR: RSILLER 2016/04/08

THIRD ANGLE PROJECTION | DRAWING: A3-SIZE | SERIES: 120065

molex

CSE M12 XP AC MA STR XM SE

PRODUCT CUSTOMER DRAWING

DOCUMENT NUMBER	DOC TYPE	DOC PART	REVISION
1200659185	PSD	000	A13

MATERIAL NUMBER	CUSTOMER	SHEET NUMBER
SEE PART LIST	GENERAL MARKET	4 OF 5

DOCUMENT STATUS	P1	RELEASE DATE	2025/05/20 07:26:55

FORMAT: master-tb-prod-A3
REVISION: J1
DATE: 2021/05/01

PART LIST

MOLEX P/N	ENGINEERING No.	L [mm]
4P CABLE P03		
1200060572	804006P03M100	10000
1200010090	804006P03M100W	10000
1200659154	804006P03M100Y	10000
1200658463	804006P03M150	15000
1200063472	804006P03M200	20000
1200659190	804006P03M250	25000
1200659191	804006P03M300	30000
1200659192	804006P03M350	35000
1200659193	804006P03M400	40000
5P CABLE P03		
1200655011	805006P03M005	500
1200659316	805006P03M005H	500
1200063731	805006P03M0065	600
1200659317	805006P03M007H	700
1200658092	805006P03M010	1000
1200659318	805006P03M010H	1000
1200060680	805006P03M020	2000
1200065002	805006P03M0201	2000
1200659319	805006P03M020H	2000
1200658913	805006P03M030	3000
1200652157	805006P03M040	4000
1200060682	805006P03M050	5000
1200659320	805006P03M050H	5000
1200062082	805006P03M060	6000
1200658217	805006P03M090	9000
1200652158	805006P03M100	10000
1200659321	805006P03M100H	10000
1200062631	805006P03M120	12000
1200659281	805006P03M150	15000
1200659322	805006P03M150H	15000
1200659224	805006P03M200	20000
1200659323	805006P03M200H	20000
1200659225	805006P03M300	20000
1200659324	805006P03M300H	30000
1200659325	805006P03M350H	35000

CABLE LENGTH TOLERANCES

OVER	UP TO AND INCLUDING	TOLERANCES
0	305mm	+19mm
305mm	915mm	+45mm
915mm	1830mm	+56mm
1830mm	3660mm	+89mm
3660mm	7320mm	+165mm
7320mm	14640mm	+317mm
14640mm	30500mm	+610mm
30500mm	>	+2% of finished length

THIS DRAWING CONTAINS INFORMATION THAT IS PROPRIETARY TO MOLEX ELECTRONIC TECHNOLOGIES, LLC AND SHOULD NOT BE USED WITHOUT WRITTEN PERMISSION

FUNCTIONAL SYMBOLS: FA = 0, FC = 0, FD = 0

DIVISIONAL SYMBOLS

DIMENSION UNITS	SCALE
mm	1:1

GENERAL TOLERANCES (UNLESS SPECIFIED)

ANGULAR TOL	±	1.0 °
4 PLACES	±	
3 PLACES	±	
2 PLACES	±	0.05
1 PLACE	±	0.3
0 PLACES	±	0.5

DRAFT WHERE APPLICABLE MUST REMAIN WITHIN DIMENSIONS

CURRENT REV DESC: PN AND CABLE TAKEN FROM DRAWING 1200650971, LAYOUT REVISED

EC NO: 822575
DRWN: RSCHIEBER 2025/04/08
CHK'D: RSILLER 2025/05/20
APPR: RSILLER 2025/05/20

INITIAL REVISION:
DRWN: JMARSZALEK 2016/01/12
APPR: RSILLER 2016/04/08

THIRD ANGLE PROJECTION | DRAWING: A3-SIZE | SERIES: 120065

molex

CSE M12 XP AC MA STR XM SE

PRODUCT CUSTOMER DRAWING

DOCUMENT NUMBER	DOC TYPE	DOC PART	REVISION
1200659185	PSD	000	A13

MATERIAL NUMBER	CUSTOMER	SHEET NUMBER
SEE PART LIST	GENERAL MARKET	5 OF 5

DOCUMENT STATUS	P1	RELEASE DATE	2025/05/20 07:26:55

FORMAT: master-tb-prod-A3
REVISION: J1
DATE: 2021/05/01

8 POLE MM

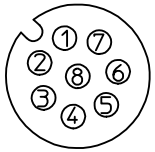

FEMALE INSERT 3P
VIEW FROM FRONT SIDE

Pin	WIRE COLOR	Wire color
1	WHITE	WH
2	BROWN	BN
3	GREEN	GN
4	YELLOW	YE
5	GREY	GY
6	PINK	PK
7	BLUE	BU
8	RED	RD

Tablica tolerancji dlugosci
Table of lenght tolerances

Powyzej / Over	Do-wlacznie / Up to and including	Tolerancja (+) / Tolerance
0	305	+19
305	915	+45
915	1830	+56
1830	3660	+89
3660	7320	+165
7320	14640	+317
14640	30500	+610
30500	>	+2% dlugosci / of lenght

PART No MATRIX

8	0	8	0	0	6	X	X	X	M	X	X	X	X	X

- 8=Micro Change
- 0=Portable
- 3=3 Core, 4=4 Core, 5=5 Core
- 006= Male straight
- H08 - UL Listed LSOH Black PUR 0.25mm² (24AWG); P02 - 24AWG BLACK PUR CABLE; E02 - CABLE PVC BLACK 0.25mm²
- M=Metres, F=Feet
- LENGTH: 020=2 METRES, 050=5 METRES, 200=20 METRES
- OPTIONS: Coupling Nut Material: Blank=Standard, 1=Stainless Steel, 5=Delrin
- OVERMOULD COLOR: Blank=BLACK (Standard), A=GREY, Y=YELLOW

VIEW FROM
FRONT SIDE

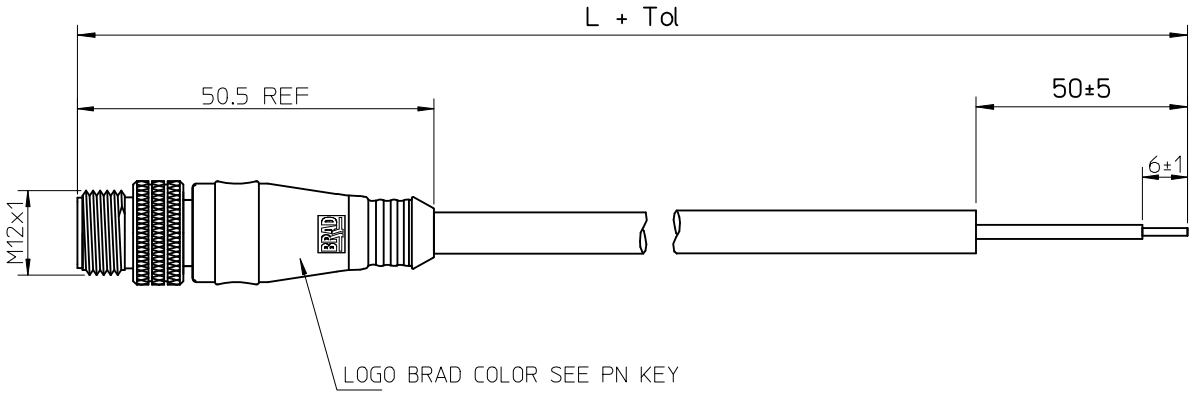

DRAWING UPDATE	EC NO: IPG2013-0156	DRWN:HWALCZAK	2012/07/03
		CH'KD:	
		APPR:MIWASIECZKO	2012/10/11
A1	REV	DESCRIPTION	

QUALITY SYMBOLS: ▼=0, (C)=0

GENERAL TOLERANCES (UNLESS SPECIFIED)

	mm	INCH
4 PLACES	± ---	± ---
3 PLACES	± ---	± ---
2 PLACES	± ---	± ---
1 PLACE	± ---	± ---
ANGULAR ±---°		

DRAFT WHERE APPLICABLE MUST REMAIN WITHIN DIMENSIONS

DIMENSION STYLE: MM ONLY
SCALE: ---
DESIGN UNITS: METRIC
FIRST ANGLE PROJECTION

DRAWN BY	HWALCZAK	DATE 2012/02/10
CHECKED BY	JMARSZALEK	DATE 2012/02/16
APPROVED BY	MDYSZEWSKA	DATE 2012/02/16

TITLE: CSE M12 8P AC MA STR PUR XM SE UNSH

molex MOLEX INCORPORATED

MATERIAL NO.: MATRIX DRAWING
DOCUMENT NO.: SD-120065-001
SHEET NO.: 1 OF 1
SIZE: A3

THIS DRAWING CONTAINS INFORMATION THAT IS PROPRIETARY TO MOLEX INCORPORATED AND SHOULD NOT BE USED WITHOUT WRITTEN PERMISSION