DESCRIPTION: 862 SERIES // 2PC M12 PCB VERT MOUNT // M // 3P-5P

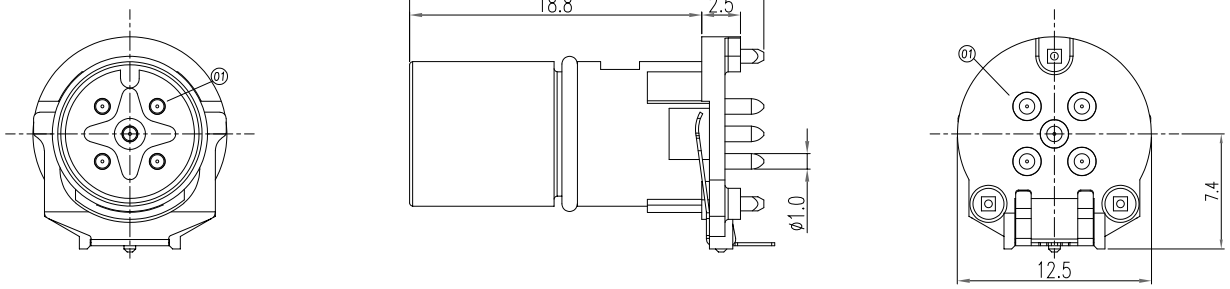

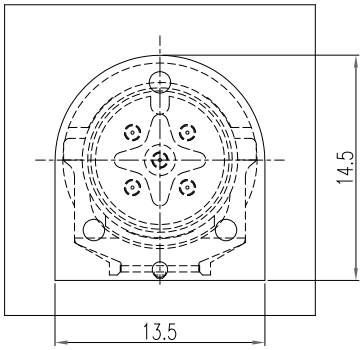

Component side (front view)
Recommended keepout area on the circuit board

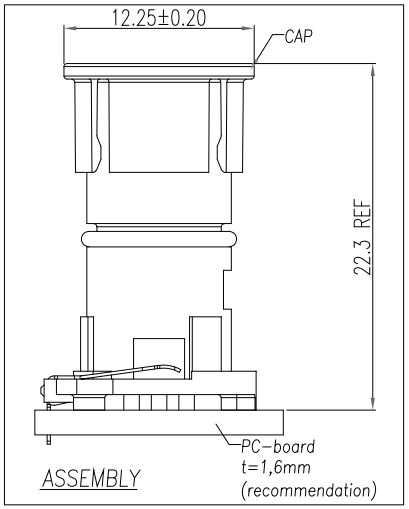

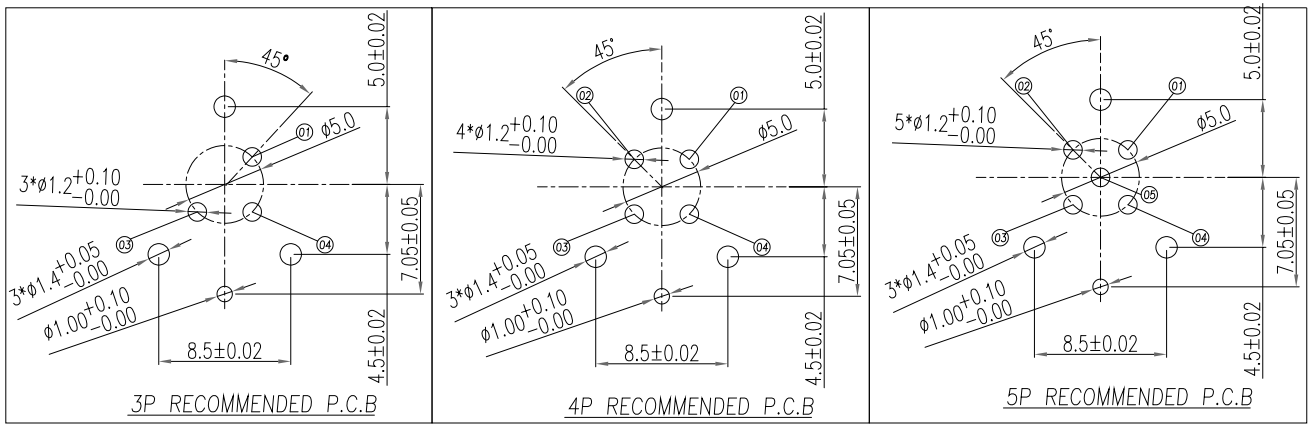

SPECIFICATIONS:

MATERIALS:

HOUSING:	PA9T, UL94 V-0, BLACK
CONTACTS:	GOLD FLASH PLATED BRASS
GROUND:	NICKEL PLATED PHOSPHOR BRONZE
ORING:	VITON
CAP:	PA66

ELECTRICAL:

RATED CURRENT:	4A
RATED VOLTAGE:	3P & 4P => 250V // 5P => 60V
INSULATION RESISTANCE:	100 MOhms MIN.
CONTACT RESISTANCE:	10 mOhms MAX.

ENVIRONMENT:

OPERATING TEMPERATURE:	-40°C TO +85°C
WATER PROOF:	IP67 (Mated Condition)

NORCOMP 3P MATING PART NUMBERS:

858-L03-203RKT4*
858-R03-203RSS4*
858-R03-203RSU4*
*Also all material and contact plating variants

MUST PURCHASE PART NUMBER "862-M-SHELL" OR "862-M-FM-SHELL SEPARATELY

862-00Y-113R001

003 = 3 POSITION
004 = 4 POSITION
005 = 5 POSITION

RoHS COMPLIANT

UNITS = mm

DO NOT SCALE FROM DRAWING

THESE DRAWINGS AND SPECIFICATIONS ARE THE PROPERTY OF NorComp AND SHALL NOT BE REPRODUCED, COPIED OR USED AS THE BASIS FOR THE MANUFACTURE OR SALE OF APPARATUS WITHOUT WRITTEN PERMISSION.

DRAWN:	J. KADEL
DATE:	03/18/2024

NorComp

SCALE: NTS	SHEET 1 OF 2	REV 1
DWG NO. 862-00Y-113R001		

DESCRIPTION: 862 SERIES // 2PC M12 PCB VERT MOUNT // M // 3P-5P

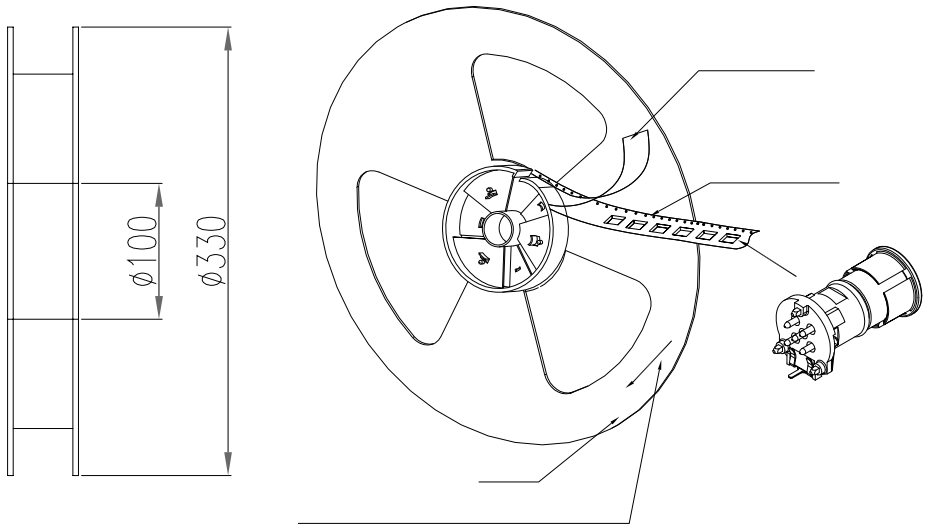

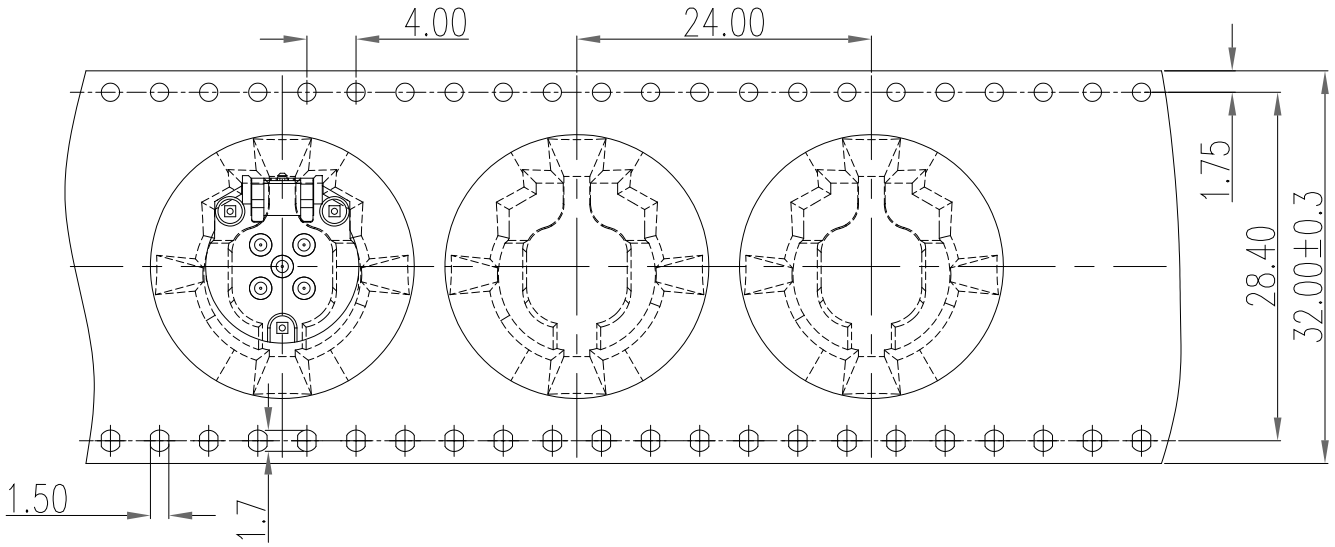

The tape size complies with the (EIA-481-D) specification requirements.

RoHS COMPLIANT

UNITS = mm

DO NOT SCALE FROM DRAWING

THESE DRAWINGS AND SPECIFICATIONS ARE THE PROPERTY OF NorComp AND SHALL NOT BE REPRODUCED, COPIED OR USED AS THE BASIS FOR THE MANUFACTURE OR SALE OF APPARATUS WITHOUT WRITTEN PERMISSION.

DRAWN:	DATE:
J. KADEL	03/18/2024

NorComp

SCALE:	SHEET	OF	REV
NTS	2	2	1

DWG NO. 862-00Y-113R001