SHEET OF

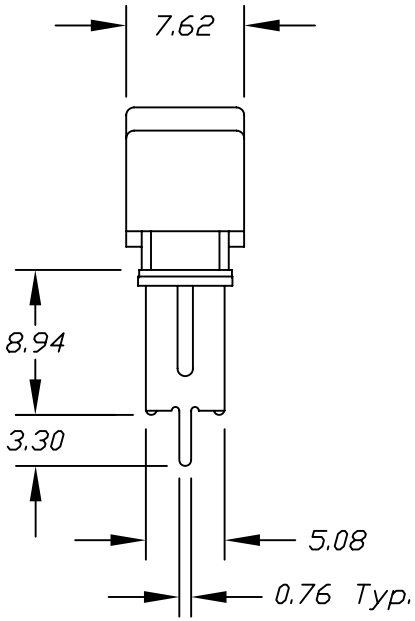

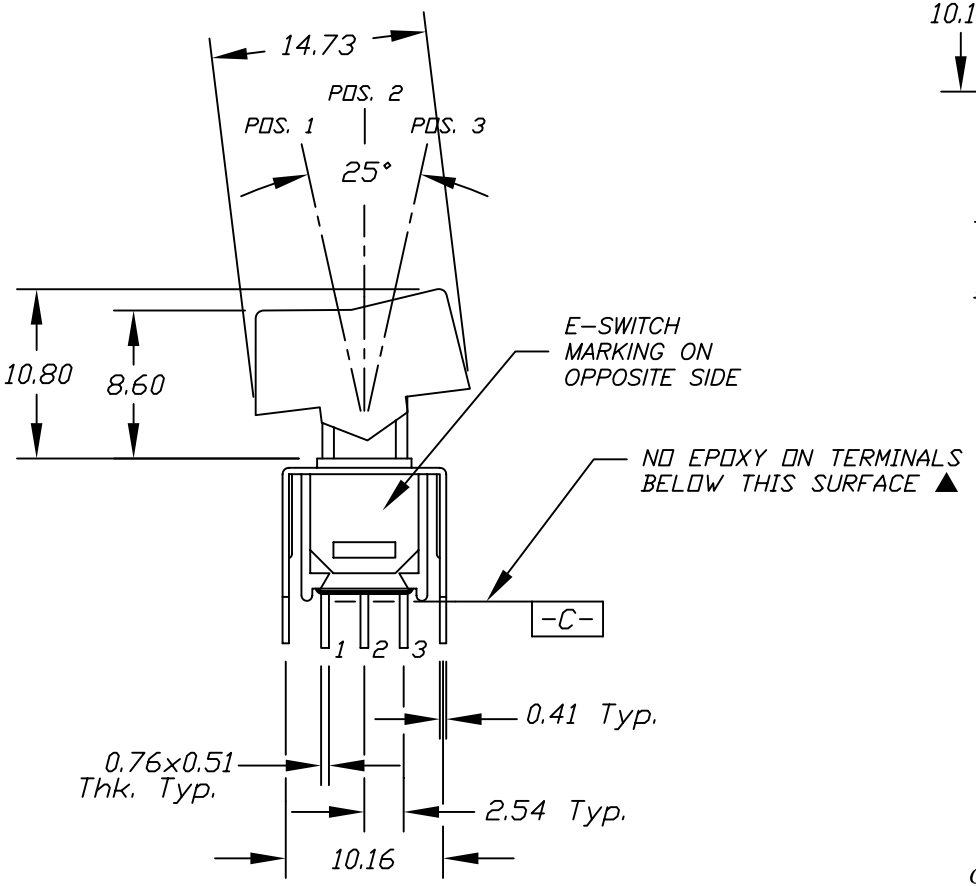

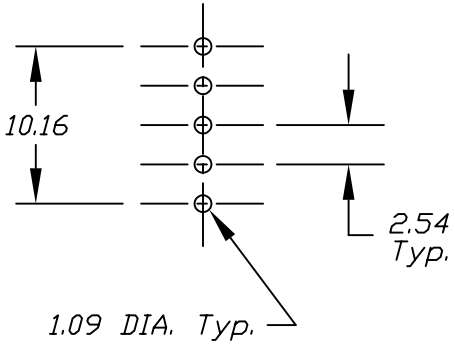

RECOMMEND P.C.B. LAYOUT

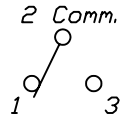

CIRCUIT: SPDT
CONTACT CONFIGURATION

SWITCH FUNCTION		
POS. 1	POS. 2	POS. 3
ON	OFF	ON
2-3	OPEN	2-1

NOTES:

1. ALL DIMENSIONS IN MM
2. GENERAL TOLERANCE: 0.0=±0.4
   0.00=±0.25
3. RATING: 3 Amps @120VAC or 28VDC; 1.5 Amp @250VAC.
4. ELECTRICAL LIFE: 30,000 make-and-break cycles at full load.
5. INSULATION RESISTANCE: 1,000M Ohms min.
6. DIELECTRIC STRENGTH: 1,000 V RMS @sea level.
7. OPERATING TEMP.: -30°C to 85°C

REV.	ECN No.	DESCRIPTION	DATE	CHKD
A	10562	RELEASED FOR PRODUCTION	3/8/00	MM

THE INFORMATION CONTAINED IN THIS DOCUMENT IS PROPRIETARY TO E-SWITCH AND IS NOT TO BE COPIED OR TRANSFERRED

E-SWITCH®

TITLE 400 MSP-3 R1 VS2 Q E

SCALE	DATE	DR	DWG	REV
2:1	3/8/00	MM	T413001	A