SHEET OF

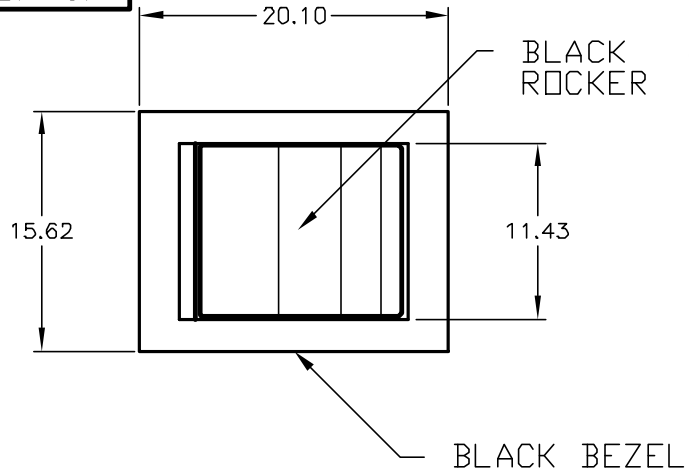

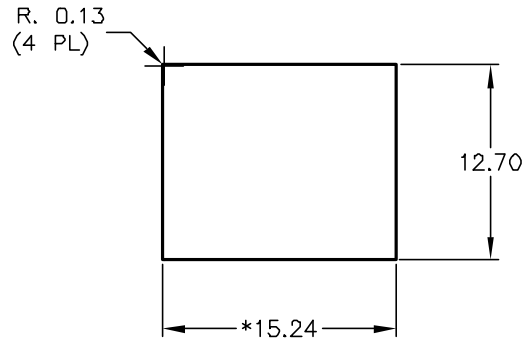

RECOMMENDED PANEL MOUNTING

PANEL THICKNESS

1.52 TO 3.18

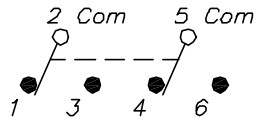

CIRCUIT: DPDT

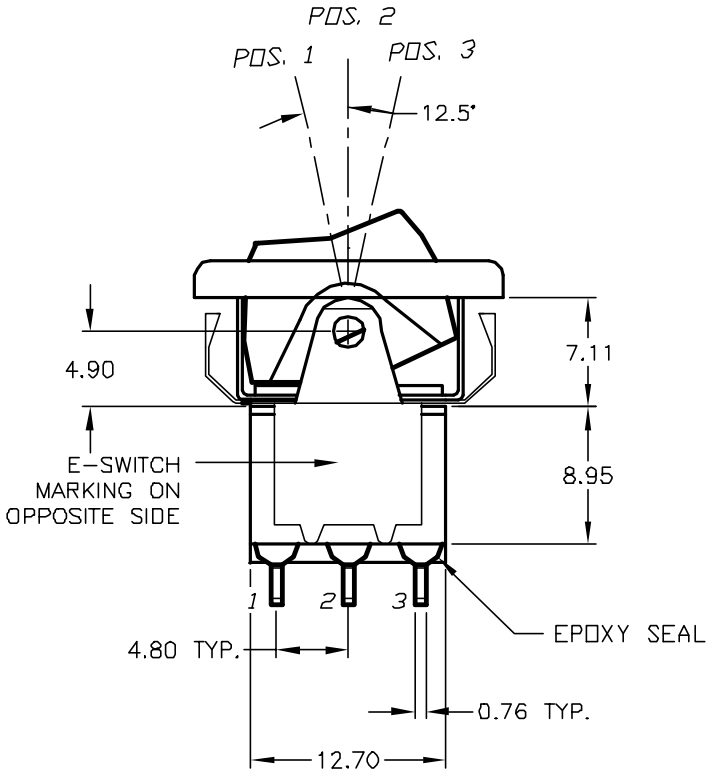

▲ * DIMENSION IS 15.75/15.88 FOR PANEL THICKNESS BETWEEN 1.52mm TO 3.18mm

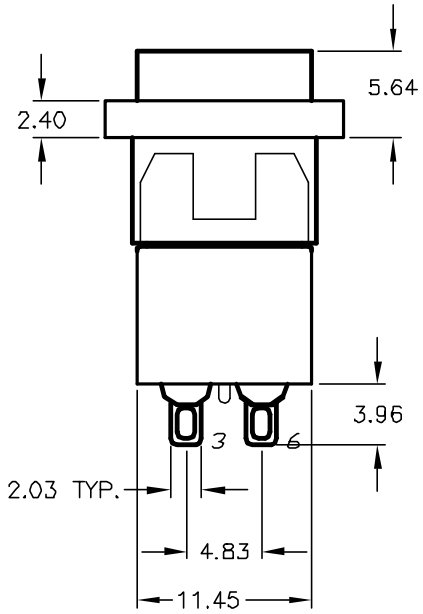

SWITCH FUNCTION		
POS. 1	POS. 2	POS. 3
ON	ON	(ON)
2-3,5-6	2,1,5-6	2-1,5-4

( )=MOMENTARY

NOTES:

1. ALL DIMENSIONS IN MM [INCH]
2. GENERAL TOLERANCE: X.X=±0.4
   X.XX=±0.25
3. TERM. NOS. FOR REF. ONLY
4. RATING: 5A @120VAC OR 28VDC
   2A @250VAC
5. MATERIAL: FIXED TERMINAL & MOVING CONTACT
   Copper Alloy w/Silver Plate
6. CONTACT RESISTANCE: 10mILLI Ohms max initial
   @2-4VDC, 100mA for AG & AU
7. ELECTRICAL LIFE: 50,000 make-and-break
   cycles at full load.
8. INSULATION RESISTANCE: 1,000M ohm min.
9. DIELECTRIC STRENGTH: 1000V RMS @sea level
10. OPERATING TEMP.: -30°C to 85°C

REV.	ECN No.	DESCRIPTION	DATE	CHKD
A	12032	RELEASED FOR PRODUCTION	4/3/02	CB

THE INFORMATION CONTAINED IN THIS DOCUMENT IS PROPRIETARY TO E-SWITCH AND IS NOT TO BE COPIED OR TRANSFERRED

E-SWITCH®

TITLE 300 DP-8 R6 BLK M1 Q E BLK

SCALE	DATE	DR	DWG	REV
2:1	4/3/02	CB	T328001	A