RECTRON SEMICONDUCTOR
TECHNICAL SPECIFICATION

MSB201S-T-A01 THRU MSB207S-T-A01

SINGLE-PHASE GLASS PASSIVATED SILICON BRIDGE RECTIFIER

VOLTAGE RANGE 50 to 1000 Volts CURRENT 2.0 Amperes

FEATURES

* Good for automation insertion
* Surge overload rating - 60 amperes peak
* Ideal for printed circuit board
* Reliable low cost construction utilizing molded
* Glass passivated device
* Polarity symbols molded on body
* Mounting position: Any

MECHANICAL DATA

* UL listed the recognized component directory, file #E94233
* Epoxy: Device has UL flammability classification 94V-O
* Halogen-free



MSBS

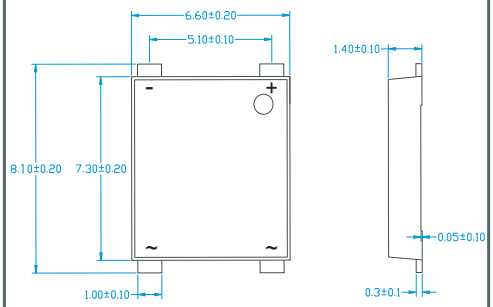

Dimensions in inches and (millimeters)

MAXIMUM RATINGS AND ELECTRICAL CHARACTERISTICS

Ratings at 25 °C ambient temperature unless otherwise specified.
resistive or inductive load.

MAXIMUM RATINGS (At T_A = 25°C unless otherwise noted)

RATINGS	SYMBOL	MSB201S	MSB202S	MSB203S	MSB204S	MSB205S	MSB206S	MSB207S	UNITS
Maximum Recurrent Peak Reverse Voltage	V_{RRM}	50	100	200	400	600	800	1000	Volts
Maximum RMS Bridge Input Voltage	V_{RMS}	35	70	140	280	420	560	700	Volts
Maximum DC Blocking Voltage	V_{DC}	50	100	200	400	600	800	1000	Volts
Maximum Average Forward Output Current at T_C = 110°C	I_O	2.0							Amps
Peak Forward Surge Current 8.3 ms single half sine-wave superimposed on rated load (JEDEC method)	I_{FSM}	80							Amps
Typical Current Squared Time	I^2T	26.56							A^2S
Typical Thermal Resistance (Note 2)	$R_{\theta JA}$	40							°C/W
	$R_{\theta JL}$	15							
Operating and Storage Temperature Range	T_J,T_{STG}	-55 to + 150							°C

ELECTRICAL CHARACTERISTICS (At T_A = 25°C unless otherwise noted)

CHARACTERISTICS		SYMBOL	MSB201S	MSB202S	MSB203S	MSB204S	MSB205S	MSB206S	MSB207S	UNITS
Maximum Forward Voltage Drop per Bridge Element at 2.0A DC		V_F	1.1							Volts
Maximum Reverse Current at Rated DC Blocking Voltage per element	@T_A = 25°C	I_R	1.0							µAmps
	@T_A = 125°C		500							µAmps

Note: 1."Fully ROHS compliant","100% Sn plating(Pb-free).
2. Thermal Resistance: Mounted on PCB.
3. Available in Halogen-free epoxy by adding suffix -HF after the part nbr.

2016-08
REV: O

RATING AND CHARACTERISTICS CURVES (MSB201S-T-A01 THRU MSB207S-T-A01)

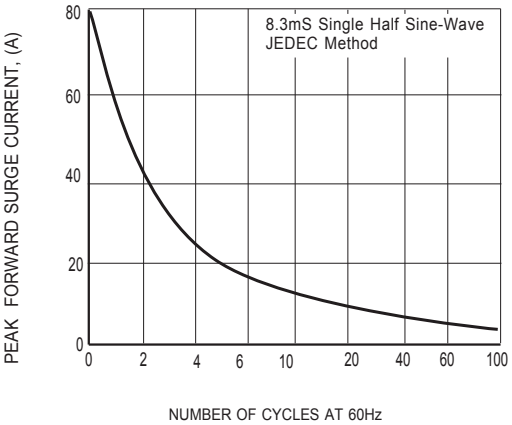

FIG. 1 - MAXIMUM NON-REPETITIVE FORWARD SURGE CURRENT

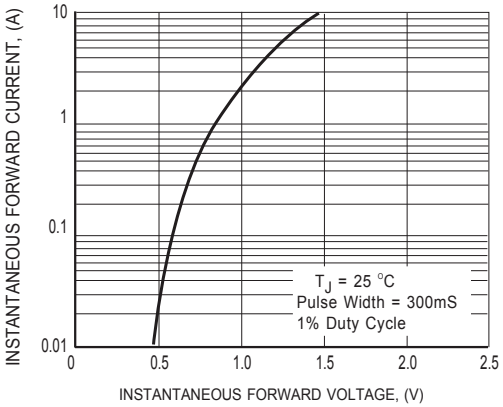

FIG.2 TYPICAL INSTANTANEOUS FORWARD CHARACTERISTICS

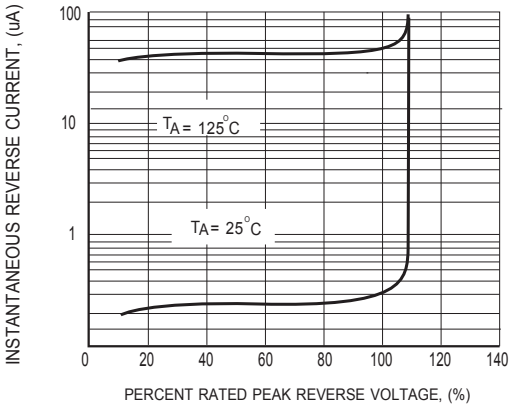

FIG.3 TYPICAL REVERSE CHARACTERISTICS

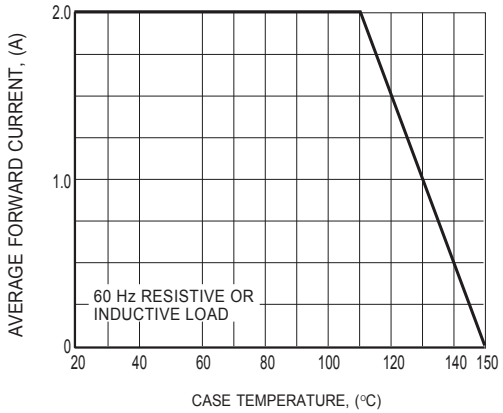

FIG.4 TYPICAL FORWARD CURRENT DERATING CURVE

REEL TAPING SPECIFICATIONS FOR SURFACE MOUNT DEVICES - MSBS

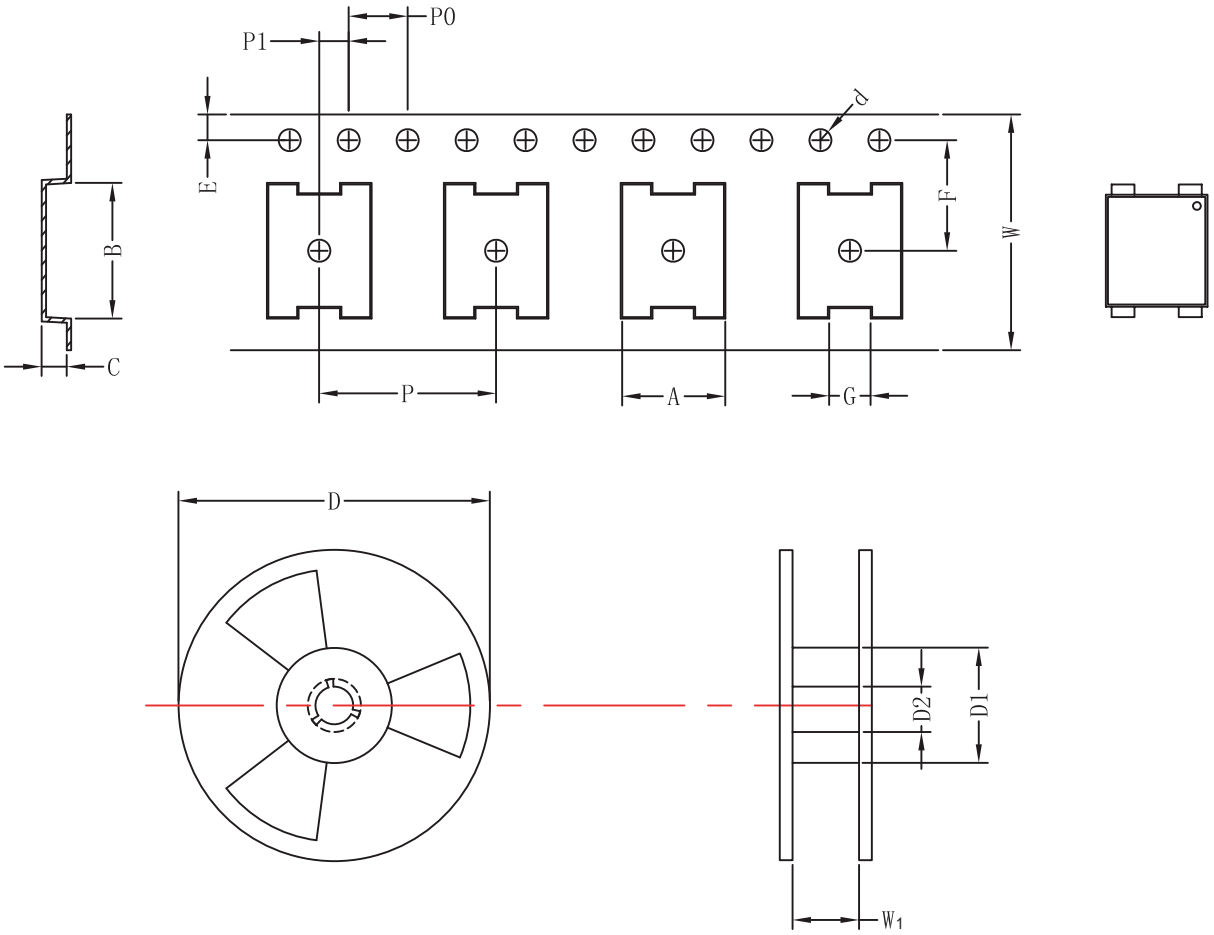

Fig.: Configuration of MSBS REEL TAPING

ITEM	SYMBOL	SPECIFICATIONS (mm)	SPECIFICATIONS (inch)
Carrier width	A	0.69 ± 0.1	0.272 ± 0.004
Carrier length	B	7.60 ± 0.1	0.299 ± 0.004
Carrier depth	C	1.70 ± 0.1	0.067 ± 0.004
Sprocket hole	d	1.50 ± 0.1	0.059 ± 0.004
Reel outside diameter	D	330.0 ± 2.0	12.992 ± 0.079
Reel inner diameter	D_1	16.4 ± 2.0	0.646 ± 0.079
Feed hole diameter	D_2	13.0 ± 0.2	0.512 ± 0.008
Sprocket hole position	E	1.75 ± 0.1	0.069 ± 0.004
Punch hole position	F	7.5 ± 0.1	0.295 ± 0.004
Punch hole pitch	P	12.0 ± 0.1	0.472 ± 0.004
Sprocket hole pitch	P_0	4.0 ± 0.1	0.157 ± 0.004
Embossment center	P_1	2.0 ± 0.1	0.079 ± 0.004
Tape width	W	16.0 ± 0.3	0.63 ± 0.012
Reel width	W_1	22.4 ± 1.0	0.882 ± 0.039

PACKAGING OF DIODE AND BRIDGE RECTIFIERS

REEL PACK

PACKAGE	PACKING CODE	EA PER REEL	EA PER INNER BOX	COMPONENT SPACE (mm)	TAPE SPACE (mm)	REEL DIA (mm)	CARTON SIZE (mm)	EA PER CARTON	GROSS WEIGHT(Kg)
MSBS	-T	3,000	3,000	9.5	52	330	360*355*360	24,000	9.0

Marking Description

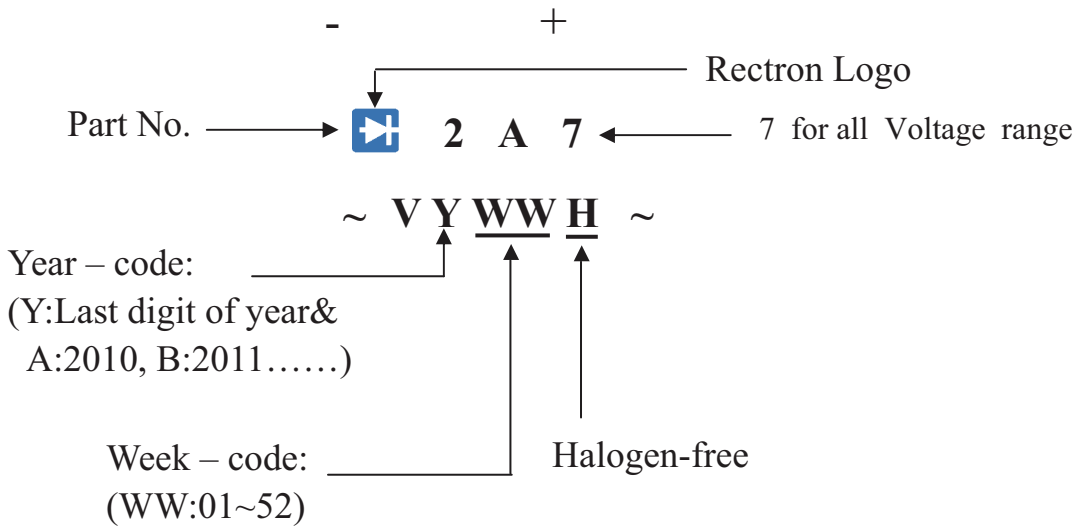

DISCLAIMER NOTICE

Rectron Inc reserves the right to make changes without notice to any product specification herein, to make corrections, modifications, enhancements or other changes. Rectron Inc or anyone on its behalf assumes no responsibility or liability for any errors or inaccuracies. Data sheet specifications and its information contained are intended to provide a product description only. "Typical" parameters which may be included on RECTRON data sheets and/ or specifications can and do vary in different applications and actual performance may vary over time. Rectron Inc does not assume any liability arising out of the application or use of any product or circuit.

Rectron products are not designed, intended or authorized for use in medical, life-saving implant or other applications intended for life-sustaining or other related applications where a failure or malfunction of component or circuitry may directly or indirectly cause injury or threaten a life without expressed written approval of Rectron Inc. Customers using or selling Rectron components for use in such applications do so at their own risk and shall agree to fully indemnify Rectron Inc and its subsidiaries harmless against all claims, damages and expenditures.