Introduction

The PD77010 PoE PSE Controller provides multi-port PoE functions, such as, port mapping (Port Matrix), port priority, port status, and system power management. The PD77010 device is used in conjunction with the PD77718T4, PD77718T3 or PD77714T4 seventh generation PoE Managers from Microchip. The PD77010 device is based on a Microchip SAMD21 controller and is packaged in a 5 mm × 5 mm 32-pin QFN package.

The following figure shows a typical PoE application with PD77010.

Figure 1. Typical PoE Application with PD77010

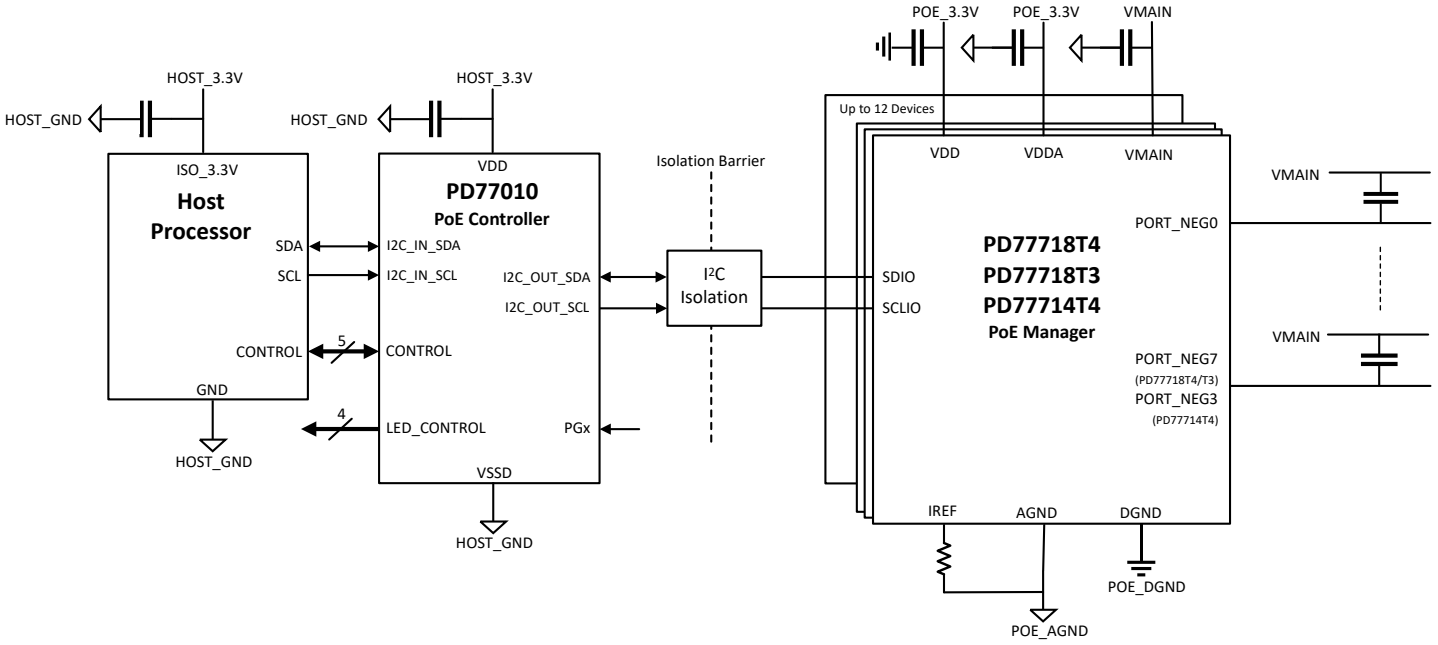

© 2026 Microchip Technology Inc. and its subsidiaries

Features

A PSE System operating in the Controller mode with the PD77010 Controller and the PD77718T4, PD77718T3 or PD77714T4 Manager has the following system and port level features:

- The PD77010 analyzes the PD Detection and Classification Results
- LED Stream Support
- Fast Port Shutdown through Power Good
- Fast Disconnect Dynamic Power Management through OSS
- Support for up to 4 Power Banks
- Power Management
  - Power up ports (based on detection/classification results, port priority, and available power)
  - Ports power down based on power over budget and ports priority
  - Autoclass
  - Power budgeting done by dedicated internal function
  - Power calculations for system static power and system dynamic power.
- Communication with Host (15-byte protocol)
  - System, Device, and Port Status
  - Temperature alarm
  - PoE PD77718 Temperature
- LLDP through host
- Save Configuration
- Host
  - High-level configuration (total power budget)
  - Ports matrix configuration
  - Ports priority definitions
  - Reading PoE information from PD77010
- PD77010 and PD77718 (through PD77010) field up-gradable firmware

Applications

- Switches and routers for enterprise, small and medium business, SOHO, and commercial markets.
- Switches and router for enterprise market.
- Switches for medium and small business, SOHO commercial markets.
- PoE injectors

© 2026 Microchip Technology Inc. and its subsidiaries

Table of Contents

Introduction....1
Features....2
Applications....2

1. Application Information....4
1.1. Controller Mode....4
1.2. Power Good....5
1.3. LED Stream....5

2. Electrical Specifications....6
2.1. Absolute Maximum Ratings....6
2.2. Immunity....6
2.3. Electrical Characteristics....6

3. Pins....8
3.1. Pin Diagram....8
3.2. Pin Descriptions....9

4. Package Information....11
4.1. PD77010 Package Outline Drawing....11
4.2. Moisture Sensitivity Level....11
4.3. Thermal Specifications....12
4.4. Recommended PCB Layout....12
4.5. Recommended Solder Reflow Information....13

5. Ordering Information....15

6. Reference Documents....16

7. Revision History....17

Microchip Information....18
Trademarks....18
Legal Notice....18
Microchip Devices Code Protection Feature....18

© 2026 Microchip Technology Inc. and its subsidiaries

1. Application Information

This section provides practical operation information for a PSE based on the PD77718T4, PD77718T3 or PD77714T4 and the PD77010 devices.

1.1. Controller Mode

This section provides a high-level description of the Controller Mode operation in a PSE based on the PD77718T4, PD77718T3 or PD77714T4 and the PD77010 devices.

The PD77010 device is used in conjunction with the PD77718T4, PD77718T3 or PD77714T4 devices to create an inclusive system, where the PD77010 PSE Controller provides high-level, sophisticated, and multi-port PoE functions, such as port mapping (Port Matrix), port priority, port status, and system power management.

The following figure shows the Controller mode operation.

Figure 1-1. Controller Mode Operation

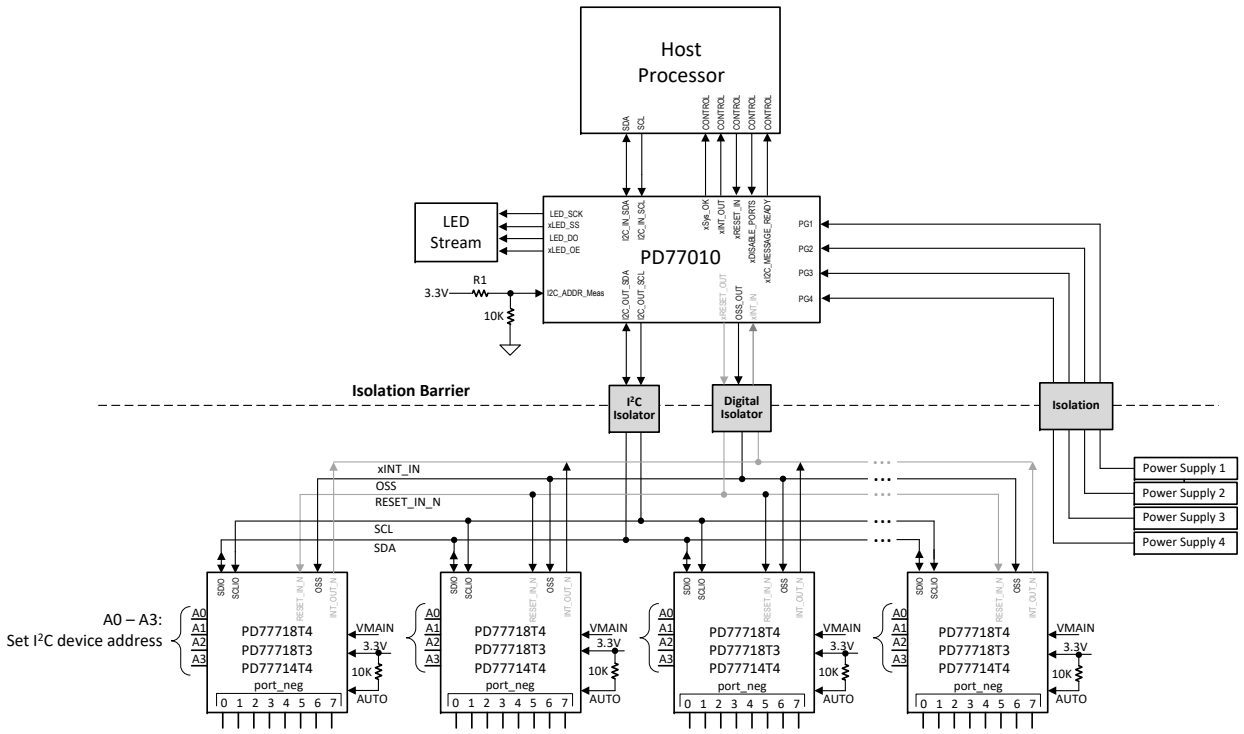

Notes:

- Alternatively, the isolation may be placed between the PD77010 and the host processor. For additional details, consult Microchip.
- The Reset and Interrupt functions (shown in grey) are reserved. The use of these functions depends on the firmware revision. To mitigate against the possibility that some firmware versions may require these functions, it is recommended that the PCB design route these functions, however the isolator may be a “do not populate” option.

© 2026 Microchip Technology Inc. and its subsidiaries

1.2. Power Good

The PD77010 device has four power-good input pins that can be connected to power-good indicators of up to four power supplies. These pins are responsible for quick turning off of ports in case of a power-supply failure or removal.

Power good indication from the power supply can be configured to either "1" or "0" to indicate existing power-supply.

When any of the Power Good pins change, the following actions are performed:

1. An interrupt is generated to indicate the change in power-good pins state.
2. Based on the new power-good pins state, a code generated by the PD77010 is sent to all the PD77718 devices, using the OSS signal, which in turn shuts down the relevant ports based on a continuously updated "Disconnect Table". For more details, see *AN5347*.

1.3. LED Stream

The PD77010 supports LED stream. Consult Microchip for additional details.

© 2026 Microchip Technology Inc. and its subsidiaries

2. Electrical Specifications

For the complete list of latest electrical specifications of the PD77010 device, see the *SAMD21 Family Data Sheet*.

2.1. Absolute Maximum Ratings

Stresses beyond those listed in this section might cause permanent damage to the device. This is a stress rating only and functional operation of the device at these or other conditions beyond those indicated in the operational sections of this specification is not implied. Exposure to absolute maximum rating conditions for extended periods might affect device reliability. The following table lists the absolute maximum ratings.

Table 2-1. Absolute Maximum Ratings

Symbol	Parameter	Min.	Max.	Units
V_{DD}	Power supply voltage	0	3.8	V
V_{PIN}	Pin voltage with respect to GND and V_{DD}	GND − 0.6V	V_{DD} + 0.6V	V
Lead soldering temperature (40s, reflow)	—	—	260	°C
Storage temperature	—	−60	150	°C

2.2. Immunity

The following table lists the immunity details of the PD77010 device.

Table 2-2. Immunity

Symbol	Parameter	Conditions	Min.	Max.	Units
ESD	ESD rating	HBM[1]	−2000	2000	V
		CDM[2]	−500	500	V

Notes:

1. ESD HBM complies with JESD22 Class 2 standard.
2. ESD CDM complies with JESD22 Class 1 standard.

2.3. Electrical Characteristics

The following table lists the general operating conditions for the PD77010 device.

Table 2-3. General Operating Conditions

Symbol	Parameter	Min.	Typ.	Max.	Units
V_{DD}	Power supply voltage	3.0	3.3	3.6	V
V_{DDA}	Power supply voltage	3.0	3.3	3.6	V
T_A	Temperature range	−40	25	85	°C
T_J	Junction temperature	—	—	100	°C
PD	Power dissipation	—	10	20	mA

© 2026 Microchip Technology Inc. and its subsidiaries

The following table lists the I/O characteristics of the PD77010 device.

Table 2-4. I/O Characteristics

Symbol	Parameter	Conditions	Min.	Typ.	Max.	Units
R_{PULL}	Internal Pull-up/Pull-down resistance	—	20	40	60	kΩ
V_{IL}	Input low-level voltage	V_{DD} = 3.0V–3.6V	—	—	0.3 × V_{DD}	V
V_{IH}	Input high-level voltage	V_{DD} = 3.0V–3.6V	0.55 × V_{DD}	—	—	
V_{OL}	Output low-level voltage	V_{DD} > 3.0V, I_{OL} maxI	—	0.1 × V_{DD}	0.2 × V_{DD}	
V_{OH}	Output high-level voltage	V_{DD} > 3.0V, I_{OH} maxII	0.8 × V_{DD}	0.9 × V_{DD}	—	
I_{OL}	Output low-level current	V_{DD} = 3V–3.63V	—	—	10	mA
I_{OH}	Output high-level current	V_{DD} = 3V–3.63V	—	—	7	mA
t_{RISE}	Rise time[1]	load = 20 pF, V_{DD} = 3.3V	—	—	15	ns
t_{FALL}	Fall time[1]	load = 20 pF, V_{DD} = 3.3V	—	—	15	ns
I_{LEAK}	Input leakage current	Pull-up resistors disabled	−1	±0.015	1	µA

Note:

1. These values are based on simulation. These values are not covered by test limits in production or characterization.

The following table lists the I^2C pins characteristics of the PD77010 device.

Table 2-5. I^2C Pins Characteristics in I^2C Configuration

Symbol	Parameter	Condition	Min.	Typ.	Max.	Units
V_{IL}	Input low-level voltage	V_{DD} = 3.0V–3.6V	—	—	0.3 × V_{DD}	V
V_{IH}	Input high-level voltage	V_{DD} = 3.0V–3.6V	0.55 × V_{DD}	—	—	
V_{HYS}	Hysteresis of Schmitt trigger inputs		0.08 × V_{DD}	—	—	
V_{OL}	Output low-level voltage	V_{DD} > 3.0V, I_{OL} = 3 mA	—	—	0.4	
I_{OL}	Output low-level current	V_{OL} = 0.4V Fast Plus Mode	20	—	—	mA
f_{SCL}	SCL clock frequency		—	—	400	KHz

© 2026 Microchip Technology Inc. and its subsidiaries

3. Pins

This section provides pin descriptions of the PD77010 device.

3.1. Pin Diagram

The following figure shows the pin diagram (top view) of the PD77010 device.

Figure 3-1. Pin Diagram

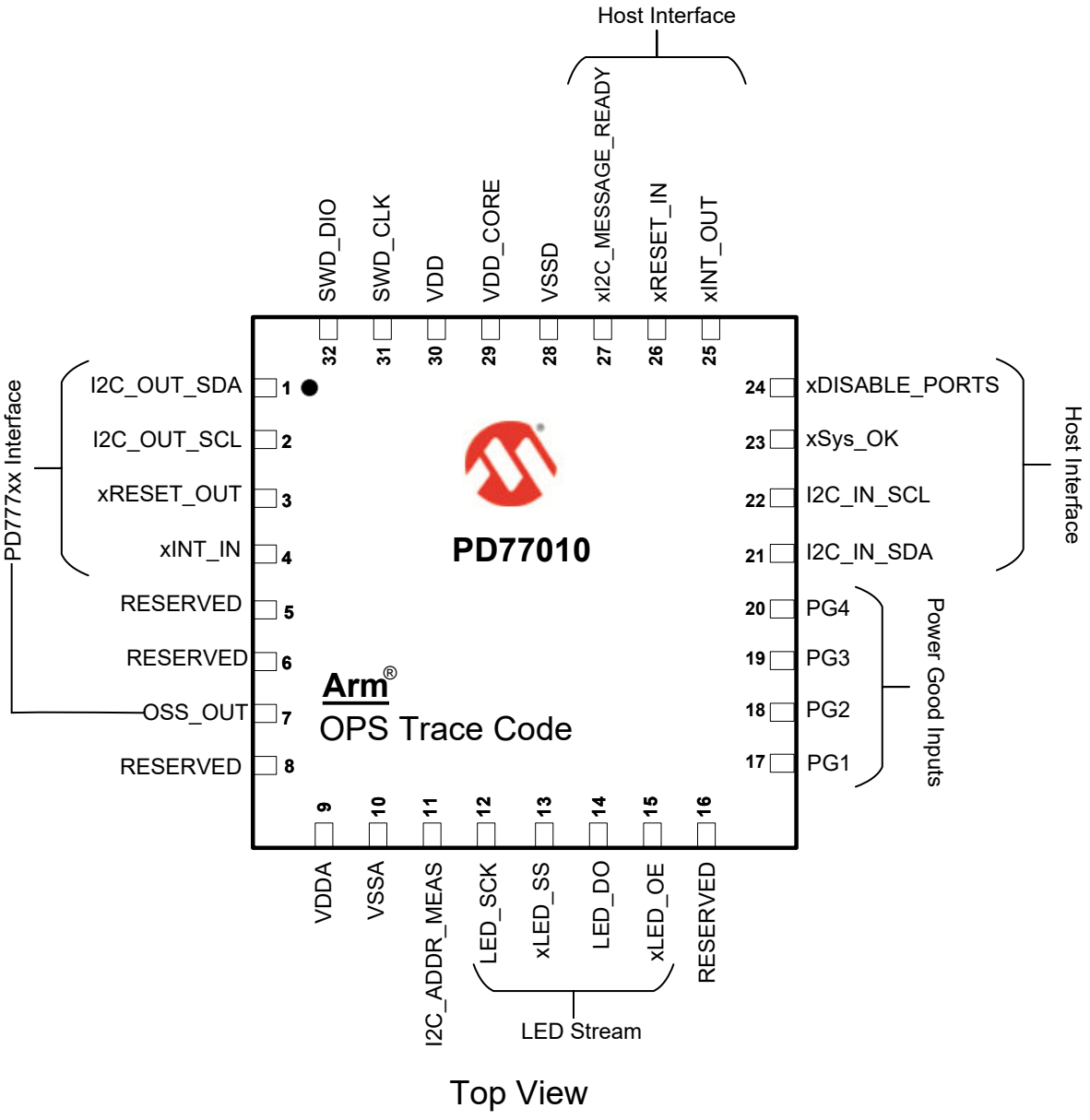

© 2026 Microchip Technology Inc. and its subsidiaries

3.2. Pin Descriptions

The following table lists the functional pin descriptions of the PD77010 device.

Table 3-1. PD77010 Pin Descriptions

PD77010	Designation	Type	Description
1	I2C_OUT_SDA	IN/OUT	I^2C bidirectional data to PD77718T4, PD77718T3 or PD77714T4 devices It is required to add a 2 KΩ pull-up resistor.
2	I2C_OUT_SCL	OUT	I^2C SCL signal to PD77718T4, PD77718T3 or PD77714T4 devices It is required to add a 2 KΩ pull-up resistor (600KHz Typical)
3	xRESET_OUT	OUT	Reset output (active low) to PD77718T4, PD77718T3 or PD77714T4 devices
4	xINT_IN	IN	An open-drain interrupt input from the common INT_OUT_N output from all the PD77718T4, PD77718T3 or PD77714T4 devices This pin is active low. Connect a 10K pull-up resistor to V_{DD}.
5	RESERVED	—	Unused, leave floating
6	RESERVED	—	Unused, leave floating
7	OSS_OUT	OUT	DATA output for OSS signaling to the PD77718T4, PD77718T3 or PD77714T4 devices. Requires a 10K pull up. Connect to the PD77718 OSS bus using isolation.
8	RESERVED	—	Unused, leave floating
9	VDDA	Supply	Main supply 3.3V
10	VSSA	GND	Ground
11	I2C_ADDR_MEAS	Analog_IN	Analog input to determine the I^2C address See Figure 3-2 and Table 3-2 for details.
12	LED_SCK	OUT	LED stream Clock out
13	xLED_SS	OUT	LED stream Client-Select (active low)
14	LED_DO	OUT	LED stream Data out
15	xLED_OE	OUT	LED stream Output Enable (active low)
16	RESERVED	—	Unused, leave floating
17	PG1	IN	Power Good input 1
18	PG2	IN	Power Good input 2
19	PG3	IN	Power Good input 3
20	PG4	IN	Power Good input 4
21	I2C_IN_SDA	IN/OUT	I^2C bidirectional data to Host 15-byte protocol messages are transmitted on this line. 2K pull-up required, see *AN5347* for details.
22	I2C_IN_SCL	IN	I^2C clock from the host processor Speed is limited to 400 KHz. 2K pull-up required.
23	xSys_OK	OUT	System validity indication The behavior of this output is controlled by individual software mask (active low). This pin is a push-pull output.
24	xDISABLE_PORTS	IN	Disable all PoE ports. When this input is asserted low, the controller shuts down all PoE ports in the system. See *AN5347* for pin connection requirements (active low).
25	xINT_OUT	OUT	Interrupt output indication This line is asserted low when a pre-configured event is in progress (active low). May require a pull-up resistor depending on Host requirements.
26	xRESET_IN	IN	Host Reset input (active low)

© 2026 Microchip Technology Inc. and its subsidiaries

Table 3-1. PD77010 Pin Descriptions (continued)

PD77010	Designation	Type	Description
27	xI2C_MESSAGE_READY	OUT	I^2C message ready indication to the host This signal is LOW when a message is ready to be read. I^2C read cycle must be invoked only if this signal is low. After reading the message, the pin is set high again, until next message is ready.
28	VSSD	GND	Ground
29	VDD_CORE	Power	Internal 1.2V core voltage Connect 1 µF capacitor to VSSD.
30	VDD	Supply	Main 3.3V supply
31	SWD_CLK	SWD	Connect 1 kΩ pull-up to 3.3V.
32	SWD_DIO	SWD	Leave open
ePAD	ePAD	GND	Connect to VSSA. It must have sufficient copper mass to ensure adequate thermal performance.

The following figure shows the I^2C address selection of the PD77010 PoE Controller.

Figure 3-2. I^2C Address Selection

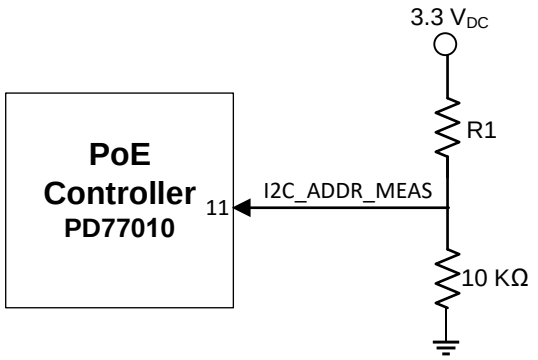

The following table lists the specific value of R1 to choose I^2C and set the address.

Table 3-2. I^2C Address Selection

I^2C Address (Hexadecimal)	R1–KΩ (1%)
0x4	147
0x8	86.6
0xC	57.6
0x10	43.2
0x14	34
0x18	26.7
0x1C	22.1
0x20	18.2
0x24	15.4
0x28	13
0x2C	11
0x30	9.31
0x34	7.87
0x38	6.49
0x3C	5.49

© 2026 Microchip Technology Inc. and its subsidiaries

4. Package Information

This section provides the package information for the PD77010 device.

4.1. PD77010 Package Outline Drawing

The following figure shows the package drawing of the PD77010 device.

Figure 4-1. PD77010 Package Outline Drawing (32 Pin QFN 5 mm × 5 mm)

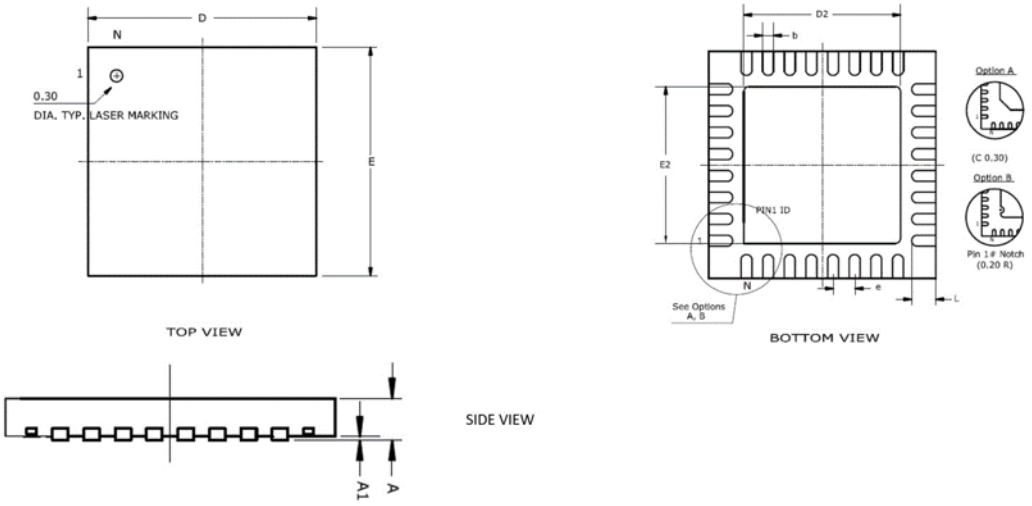

The following table lists the dimensions and measurements of the PD77010 package.

Table 4-1. PD77010 Package Outline Dimensions and Measurements

Dimension	Millimeters		Inches	
	Min.	Max.	Min.	Max.
A	0.80	1.00	0.031	0.039
A1	0.00	0.05	0	0.002
e	0.50 BSC	—	0.02 BSC	—
L	0.30	0.50	0.012	0.02
b	0.18	0.30	0.007	0.012
D2	3.50	3.70	0.138	0.147
E2	3.50	3.70	0.138	0.147
D	5.00 BSC	—	0.197 BSC	—
E	5.00 BSC	—	0.197 BSC	—

Note: Dimensions do not include protrusions; they must not exceed 0.155 mm (0.006 inch) on any side. Lead dimension must not include solder coverage. Dimensions are in millimeters and inches for reference.

4.2. Moisture Sensitivity Level

The PD77010 in a 32 pin 5 x 5 mm QFN is MSL1.

© 2026 Microchip Technology Inc. and its subsidiaries

4.3. Thermal Specifications

The following table lists the thermal specifications of the PD77010 device.

Table 4-2. Thermal Specifications

Thermal Resistance	Device	Typ.	Units	Description
θ_{JA}	PD77010	40.9	°C/W	Junction-to-ambient thermal resistance.
θ_{JC}	PD77010	15.2	°C/W	Junction-to-case thermal resistance.

4.4. Recommended PCB Layout

The following figures show the recommended PCB layout pattern for the PD77010 32-pin QFN 5 mm × 5 mm. Units are in mm.

Figure 4-2. PD77010 Solder Mask

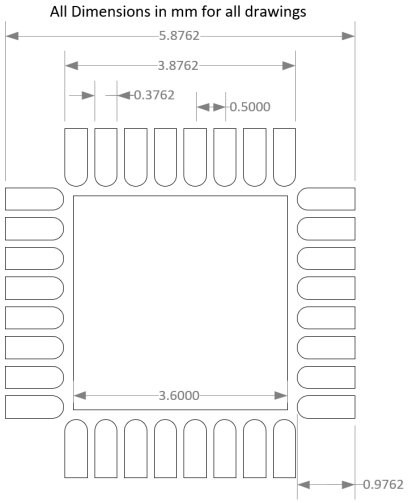

Figure 4-3. PD77010 Top-Layer Copper

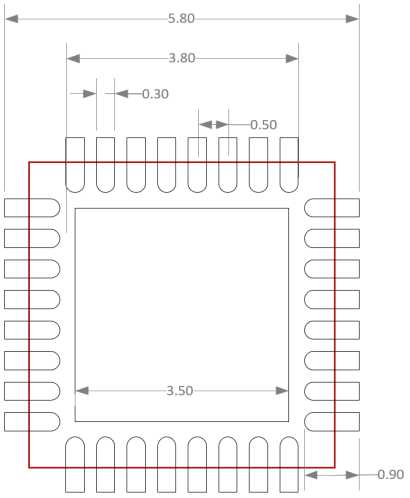

© 2026 Microchip Technology Inc. and its subsidiaries

Figure 4-4. PD77010 Paste Mask

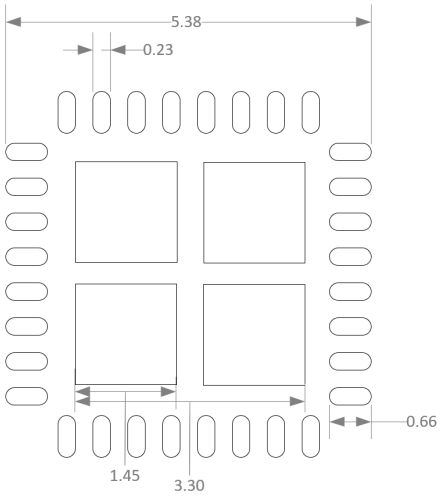

Note: The contract manufacturer has latitude to modify the solder paste stencil for manufacturability reasons. The solder paste stencil covers 65% to 80% of the thermal pad and must not allow solder to be applied to the thermal vias under the QFN package using any method they deem appropriate. Any design must be subject to system validation and qualification prior to commitment to mass production of field deployment. Use a 5 mil stencil.

4.5. Recommended Solder Reflow Information

The recommended solder reflow information is as follows:

- RoHS 6/6
- Pb-free 100% Matte Tin Finish
- Package Peak Temperature for Solder Reflow (40s maximum exposure)—260 °C (0 °C, −5 °C)

The following figures and tables show the classification reflow profiles and temperatures.

Table 4-3. Classification Reflow Profiles

Profile Feature	Sn-Pb Eutectic Assembly	Pb-Free Assembly
Average ramp-up rate (TS_{max} to Tp)	3 °C/s maximum	3 °C/s maximum
Preheat		
Temperature min (TS_{min})	100 °C	150 °C
Temperature max (TS_{max})	150 °C	200 °C
Time (ts_{min} to ts_{max})	60s to 120s	60s to 180s
Time Maintained		
Temperature (T_L)	183 °C	217 °C
Time (t_L)	60s to 150s	60s to 150s
Peak classification temperature (TP)	210 °C to 235 °C	240 °C to 255 °C
Time within 5 °C of actual peak temperature (tp)	10s to 30s	20s to 40s
Ramp-down rate	6 °C/s maximum	6 °C/s maximum
Time 25 °C to peak temperature	6 minutes maximum	8 minutes maximum

© 2026 Microchip Technology Inc. and its subsidiaries

Figure 4-5. Classification Reflow Profiles

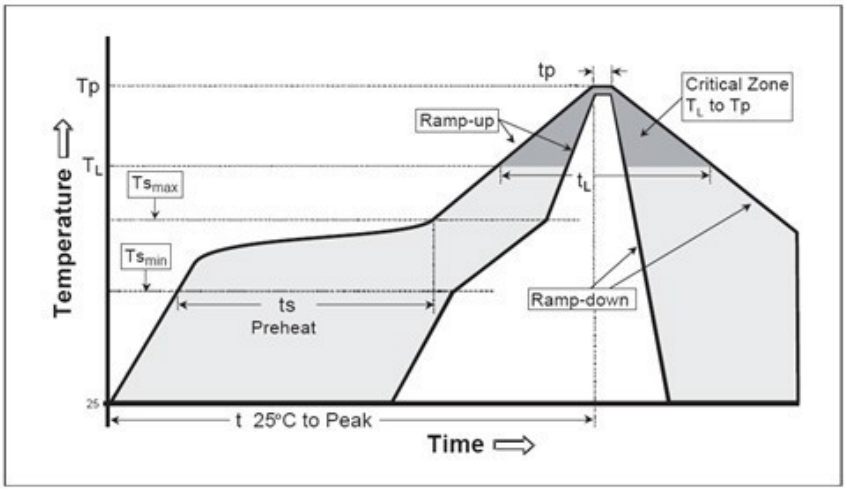

Table 4-4. Pb-Free Process—Package Classification Reflow Temperatures

Package Thickness	Volume < 350 mm^3	Volume 350–2000 mm^3	Volume > 2000 mm^3
Less than 1.6 mm[1]	260 + 0 °C	260 + 0 °C	260 + 0 °C
1.6 mm to 2.5 mm[1]	260 + 0 °C	250 + 0 °C	245 + 0 °C
Greater than or equal to 2.5 mm[1]	250 + 0 °C	245 + 0 °C	245 + 0 °C

Note:

1. Tolerance: The device manufacturer or supplier must assure process compatibility up to and including the stated classification temperature, that is, the Peak reflow temperature is 0 °C. For example, 260 °C to 0 °C, at the rated MSL value.

Exceeding the ratings that are mentioned in the preceding table might cause damage to the device.

© 2026 Microchip Technology Inc. and its subsidiaries

5. Ordering Information

The following table lists the part ordering information of the PD77010 device.

Table 5-1. Ordering Information

Part Number	Package	Packaging Type	Temperature	Part Marking
PD77010-VVVV-SSSS-TR[2, 3]	Plastic QFN 5 mm × 5 mm (32 lead)	Tape and Reel	−40 °C to 85 °C	Microchip Logo PD77010 e3 Arm® YYWWNNN[1]
PD77010-VVVV-SSSS[2, 3]	Plastic QFN 5 mm × 5 mm (32 lead)	Tray	−40 °C to 85 °C	Microchip Logo PD77010 e3 Arm YYWWNNN[1]

Notes:

1. YY = Year; WW = Week; and NNN = Trace code
2. VVVV = Firmware revision
3. SSSS = Firmware parameters options

© 2026 Microchip Technology Inc. and its subsidiaries

6. Reference Documents

This data sheet has the following reference documents:

- *PD77718T4, PD77718T3 or PD77714T4 PoE PSE Controller/Manager Data Sheet*
- *AN5347 Designing an IEEE® 802.3bt PoE System with PD77718T4, PD77718T3 and PD77714T4*
- *AN4813 Surge Protection for Systems Based on PD77718T4, PD77718T3 or PD77714T4 PSE PoE Controller/Manager*
- *PD77718T4, PD77718T3 or PD77714T4 Auto Mode Register Map*
- *AN4952 PD777xx PSE Firmware Download and Replace Flow*

© 2026 Microchip Technology Inc. and its subsidiaries

7. Revision History

The revision history describes the changes that were implemented in the document. The changes are listed by revision, starting with the most current publication.

Table 7-1. Revision History

Revision	Date	Description
D	Jan 2026	The following is a list of changes made in this revision: • Updated Table 3-1
C	04/2025	The following is a list of changes made in this revision: • Updated the Electrical Characteristics section. See Table 2-3 for details. • Added section 4.2 Moisture Sensitivity Level
B	02/2025	The following is a list of changes made in this revision: • Updated the ordering information details. See the Ordering Information section. • Updated the Typical PoE Application with PD77010 figure.
A	12/2024	Initial revision

© 2026 Microchip Technology Inc. and its subsidiaries

Microchip Information

Trademarks

The “Microchip” name and logo, the “M” logo, and other names, logos, and brands are registered and unregistered trademarks of Microchip Technology Incorporated or its affiliates and/or subsidiaries in the United States and/or other countries (“Microchip Trademarks”). Information regarding Microchip Trademarks can be found at https://www.microchip.com/en-us/about/legal-information/microchip-trademarks.

ISBN: 979-8-3371-2733-0

Legal Notice

This publication and the information herein may be used only with Microchip products, including to design, test, and integrate Microchip products with your application. Use of this information in any other manner violates these terms. Information regarding device applications is provided only for your convenience and may be superseded by updates. It is your responsibility to ensure that your application meets with your specifications. Contact your local Microchip sales office for additional support or, obtain additional support at www.microchip.com/en-us/support/design-help/client-support-services.

THIS INFORMATION IS PROVIDED BY MICROCHIP “AS IS”. MICROCHIP MAKES NO REPRESENTATIONS OR WARRANTIES OF ANY KIND WHETHER EXPRESS OR IMPLIED, WRITTEN OR ORAL, STATUTORY OR OTHERWISE, RELATED TO THE INFORMATION INCLUDING BUT NOT LIMITED TO ANY IMPLIED WARRANTIES OF NON-INFRINGEMENT, MERCHANTABILITY, AND FITNESS FOR A PARTICULAR PURPOSE, OR WARRANTIES RELATED TO ITS CONDITION, QUALITY, OR PERFORMANCE.

IN NO EVENT WILL MICROCHIP BE LIABLE FOR ANY INDIRECT, SPECIAL, PUNITIVE, INCIDENTAL, OR CONSEQUENTIAL LOSS, DAMAGE, COST, OR EXPENSE OF ANY KIND WHATSOEVER RELATED TO THE INFORMATION OR ITS USE, HOWEVER CAUSED, EVEN IF MICROCHIP HAS BEEN ADVISED OF THE POSSIBILITY OR THE DAMAGES ARE FORESEEABLE. TO THE FULLEST EXTENT ALLOWED BY LAW, MICROCHIP’S TOTAL LIABILITY ON ALL CLAIMS IN ANY WAY RELATED TO THE INFORMATION OR ITS USE WILL NOT EXCEED THE AMOUNT OF FEES, IF ANY, THAT YOU HAVE PAID DIRECTLY TO MICROCHIP FOR THE INFORMATION.

Use of Microchip devices in life support and/or safety applications is entirely at the buyer’s risk, and the buyer agrees to defend, indemnify and hold harmless Microchip from any and all damages, claims, suits, or expenses resulting from such use. No licenses are conveyed, implicitly or otherwise, under any Microchip intellectual property rights unless otherwise stated.

Microchip Devices Code Protection Feature

Note the following details of the code protection feature on Microchip products:

- Microchip products meet the specifications contained in their particular Microchip Data Sheet.
- Microchip believes that its family of products is secure when used in the intended manner, within operating specifications, and under normal conditions.
- Microchip values and aggressively protects its intellectual property rights. Attempts to breach the code protection features of Microchip products are strictly prohibited and may violate the Digital Millennium Copyright Act.
- Neither Microchip nor any other semiconductor manufacturer can guarantee the security of its code. Code protection does not mean that we are guaranteeing the product is “unbreakable”. Code protection is constantly evolving. Microchip is committed to continuously improving the code protection features of our products.

© 2026 Microchip Technology Inc. and its subsidiaries