REV	ECO#	DESCRIPTION	DATE

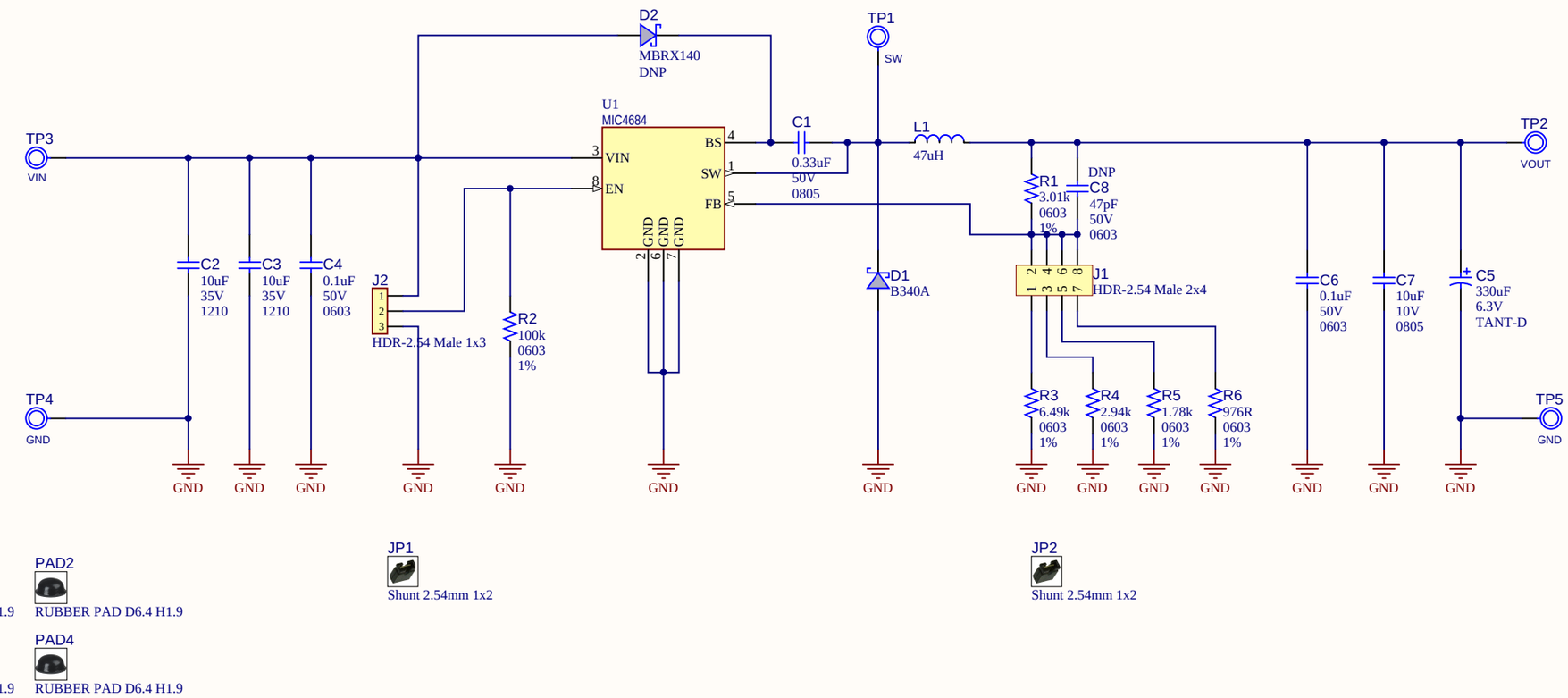

LABEL3

02- -R1
JIT

LABEL Need Help Small

Drawn By: Mihai Tanase	MICROCHIP
Engineer: Mihai Tanase	
PartNumber: ADM00821	Project Title: *MIC4684 Evaluation Board*
Sheet Title: MIC4684 Evaluation Board	Designed with Altium
Size: B	Sch #:03-10632 / Date: 5/17/2017 3:17:29 PM
	Revision: 1 / Sheet 1 of 1
File: B_Microchip.SchDoc	Altium.com