REV	ECO#	DESCRIPTION	DATE

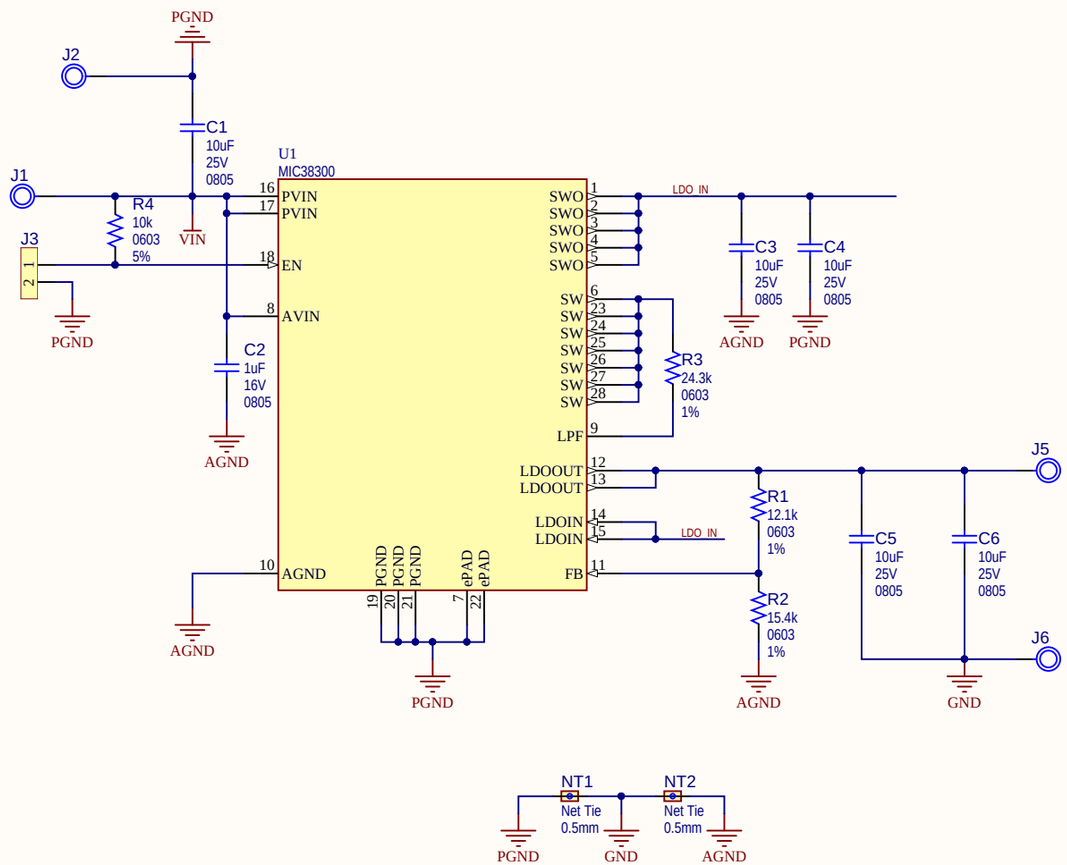

PAD1
Rubber Pad Cyl D7.9H5.3

PAD3
Rubber Pad Cyl D7.9H5.3

PAD2
Rubber Pad Cyl D7.9H5.3

PAD4
Rubber Pad Cyl D7.9H5.3

LABEL2

02- -R1
JIT

LABEL Need Help Small

Drawn By: Silvia Pavel

Engineer: Mihai Sterescu

PartNumber: ADM00822

Project Title: *MIC38300 Evaluation Board*

Sheet Title: MIC38300 Evaluation Board Schematic

Size: B | Sch #:03-10633 | Revision:1 | Date: 5/17/2018 14:10:26 | Sheet 1 of 1

File: MIC38300_EVB.SchDoc

Designed with Altium
Altium.com