THIS DRAWING IS UNPUBLISHED. RELEASED FOR PUBLICATION 2015
© COPYRIGHT 2015 BY - TE CONNECTIVITY ALL RIGHTS RESERVED.

LOC	DIST
-	-

REVISIONS

P	LTR	DESCRIPTION	DATE	DWN	APVD
	A1	REVISED PER ECO-15-001798	19MAR2015	VNB	DM
	A2	REVISED PER PCN E-20-000705	27JAN2020	PK	DM
	B	REVISED PER PCN-24-219560	30AUG2024	CO	CB
	C	REVISED PER PCN-25-233530	10DEC2024	RK	CB

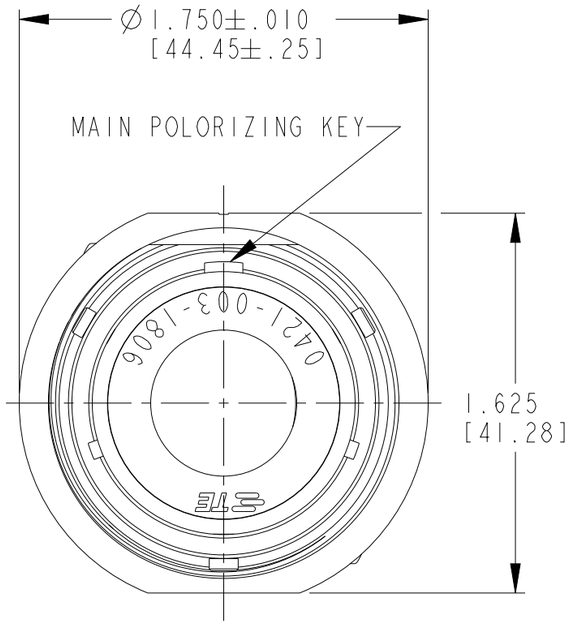

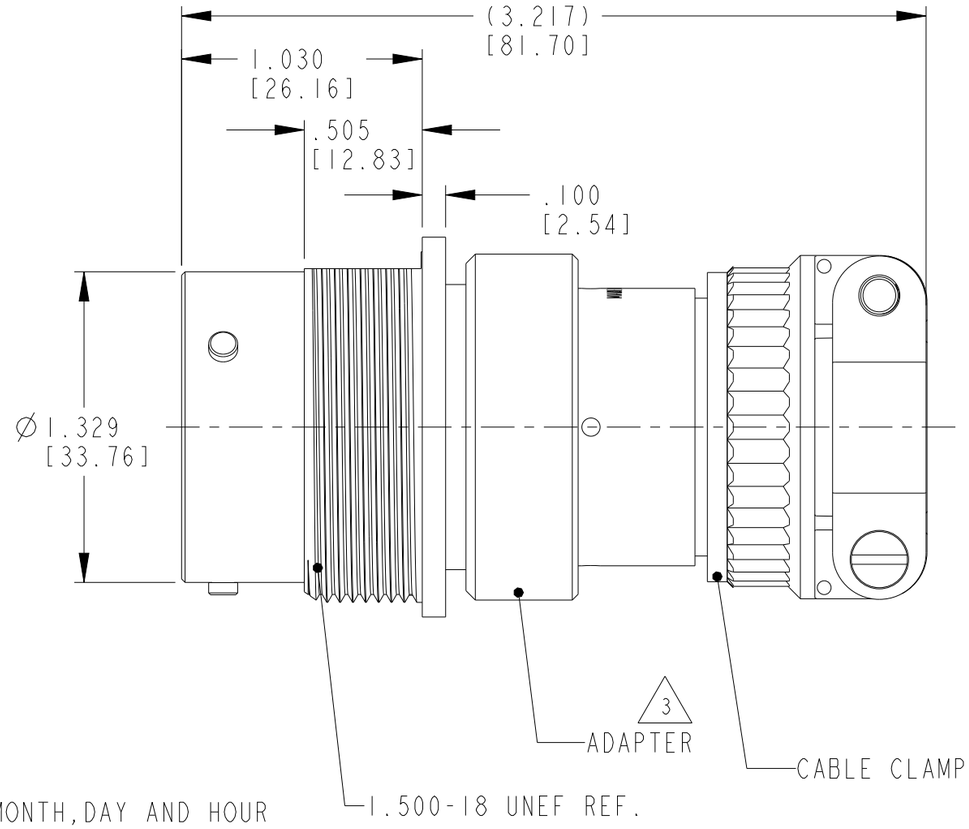

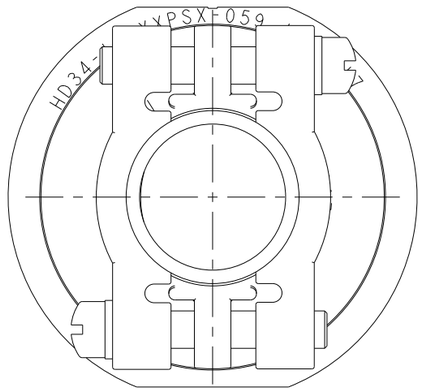

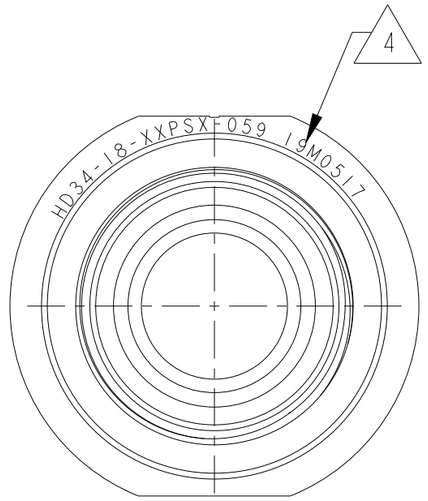

CABLE CLAMP ASSEMBLY HIDDEN VIEW

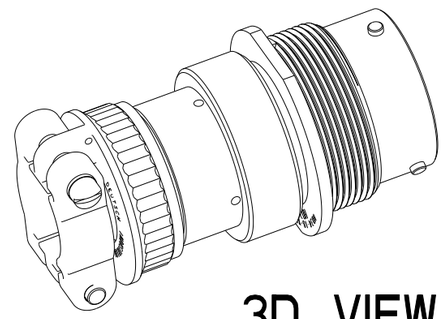

3D VIEW

4 DATE CODE: IDENTIFIES THE YEAR,MONTH,DAY AND HOUR OF ASSEMBLY.
YEAR: FIRST AND SECOND DIGITS. (14=2014)
MONTH: THIRD DIGIT,EXCLUDING I.A=JAN.,B=FEB., C=MARCH...(K=OCT.)
DAY: FOURTH AND FIFTH DIGITS (14=14th DAY)
HOUR: SIXTH AND SEVENTH DIGITS (11=11AM)

3 MATERIAL:
ADAPTER: 6061-T6 ALUMINIUM ALLOY,
GROMMET: SILICONE VMQ (RED),
RETAINER RING: PA66 GF10.

2. THE CONNECTOR MATES WITH HD36-24-XXP/SX-XXXX
X - SEAL DESIGATION, XX = NUMBER OF CAVITIES,
XXXX = MODIFICATION DESIGNATION.

1. FOR ARRANGEMENT OF CONTACT LOCATION
SEE ENVELOPE DRAWING 0425-013-1800.

NOTES:

THIS DRAWING IS A CONTROLLED DOCUMENT.

DIMENSIONS: INCHES[mm]

TOLERANCES UNLESS OTHERWISE SPECIFIED:
0 PLC ±-
1 PLC ±-
2 PLC ±-
3 PLC ±.010 [±.254]
4 PLC ±-
ANGLES ±0°30'0"

MATERIAL 3

FINISH -

DWN A. MALAGON 30JAN2007
CHK B. BAYFORD 06FEB2007
APVD R. REED 12FEB2007
PRODUCT SPEC 108-151014
APPLICATION SPEC 114-151014
WEIGHT 109g

TE Connectivity

NAME RECEPTACLE CONNECTOR SHELL SIZE 18
BAYONET COUPLING MOD -059
HD30 SERIES

SIZE	CAGE CODE	DRAWING NO	RESTRICTED TO
A3	-	C-HD34-18-XXP/SX-059	-

Customer Drawing SCALE NONE SHEET 1 OF 1 REV C

1470-19 (3/11)