THIS DRAWING IS UNPUBLISHED. RELEASED FOR PUBLICATION 2015
© COPYRIGHT 2015 BY - TE CONNECTIVITY ALL RIGHTS RESERVED.

LOC	DIST
-	-

REVISIONS

P	LTR	DESCRIPTION	DATE	DWN	APVD
	A1	REVISED PER PCN E-20-000705	27JAN2020	PK	DM
	A2	REVISED PER PCN E-20-017587	10MAR2021	CO	IG
	B	REVISED PER PCN-24-219560	30AUG2024	CO	CB
	C	REVISED PER PCN-25-233530	10DEC2024	RK	CB

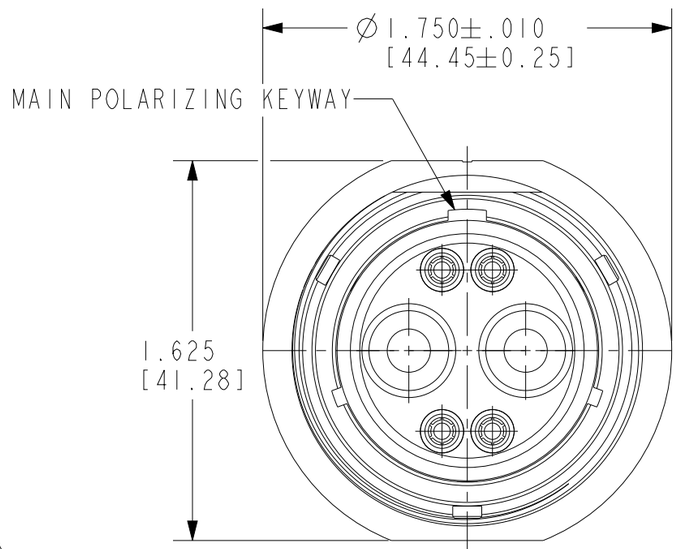

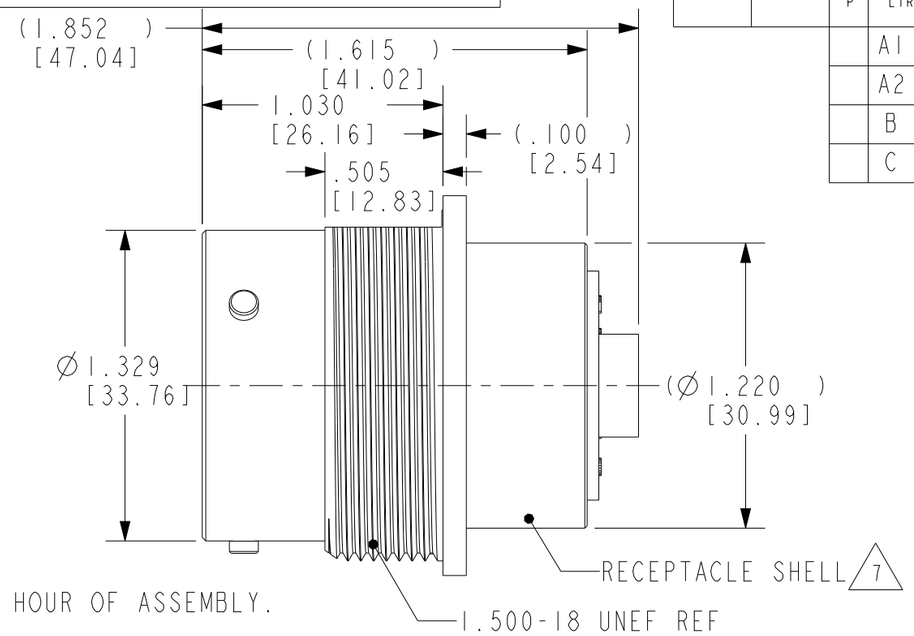

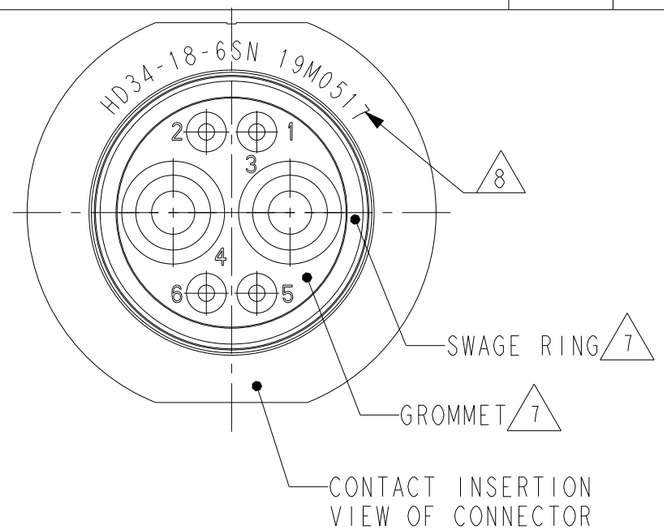

8 DATE CODE: IDENTIFIES THE YEAR,MONTH,DAY AND HOUR OF ASSEMBLY.
YEAR: FIRST AND SECOND DIGITS. (14=2014)
MONTH: THIRD DIGIT,EXCLUDING 1.A=JAN.,B=FEB.,C=MARCH...(K=OCT.)
DAY: FOURTH AND FIFTH DIGITS (14=14th DAY)
HOUR: SIXTH AND SEVENTH DIGITS (11=11AM)

7 MATERIAL:
RECEPTACLE HOUSING: 6061-T6 ALUMINIUM ALLOY
SWAGE RING: PA 15%GF (GREEN FOR N-SEAL, BLUE FOR E-SEAL
GROMMET: SILICONE VMQ (RED)

5 WHEN X = N: NORMAL SEAL WHEN X = E: REDUCED DIAMETER E-SEAL.

4. THIS PART MATES WITH PART NO. HD36-18-6PX-XXXX.
XXXX= ALL MODIFICATIONS, X= TYPE OF SEAL.

3. RECOMMENDED PANEL THICKNESS: .062 [1.58] TO .1875 [4.76].

2. THIS CONNECTOR WILL ACCOMODATE THE FOLLOWING WIRE INSULATION DIAMETERS:

5 SEAL TYPE	CONTACT SIZE	MIN INSULATION O.D.	MAX INSULATION O.D.	6 WIRE GAUGE AWG [mm²] RANGE
N	16	.100 [2.54]	.134 [3.40]	14-20 [2.0-0.5mm²]
E	16	.053 [1.35]	.120 [3.05]	14-20 [2.0-0.5mm²]
N or E	4	.261 [6.63]	.292 [7.42]	6 [13mm²]

1. CONSULT FACTORY FOR ELECTRICAL AND MATERIAL SPECIFICATIONS.

NOTES:

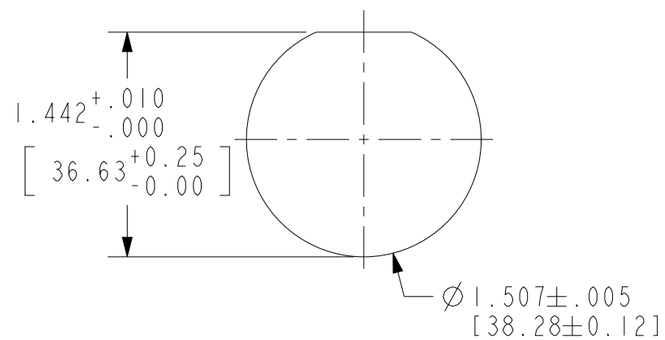

RECOMMENDED PANEL MOUNTING HOLE

THIS DRAWING IS A CONTROLLED DOCUMENT.

DIMENSIONS: INCHES[mm]

TOLERANCES UNLESS OTHERWISE SPECIFIED:
0 PLC ±-
1 PLC ±-
2 PLC ±-
3 PLC ±.010 [±.254]
4 PLC ±-
ANGLES ±0° 30′0″

MATERIAL 7

FINISH -

DWN	I. GRANTCHAROVA	02JAN2008
CHK	B. BAYFORD	18FEB2008
APVD	S. BEARD	14FEB2008
PRODUCT SPEC	108-151014	
APPLICATION SPEC	114-151014	
WEIGHT	50g	

TE Connectivity

NAME: RECEPTACLE CONNECTOR 18-6 ARR. BAYONET COUPLING

SIZE	CAGE CODE	DRAWING NO	RESTRICTED TO
A3	-	C-HD34-18-6SX	-

Customer Drawing | SCALE NONE | SHEET 1 OF 1 | REV C

1470-19 (3/11)